GILDERFLUKE & CO.• 205 SOUTH FLOWER STREET • BURBANK, CALIFORNIA 91502 • 818/840-9484 • 800/776-5972 • FAX 818/840-9485
EAST COAST/FLORIDA OFFICE • 7041 GRAND NATIONAL DRIVE • SUITE 128d • ORLANDO, FL. 32819 • 407/354-5954 • FAX 407/354-5955

Gilderfluke & Co.
ROBOTICS & SOUND SYSTEMS

- Operating Instructions -
for the
- Smart Brick System-

April 4, 2001

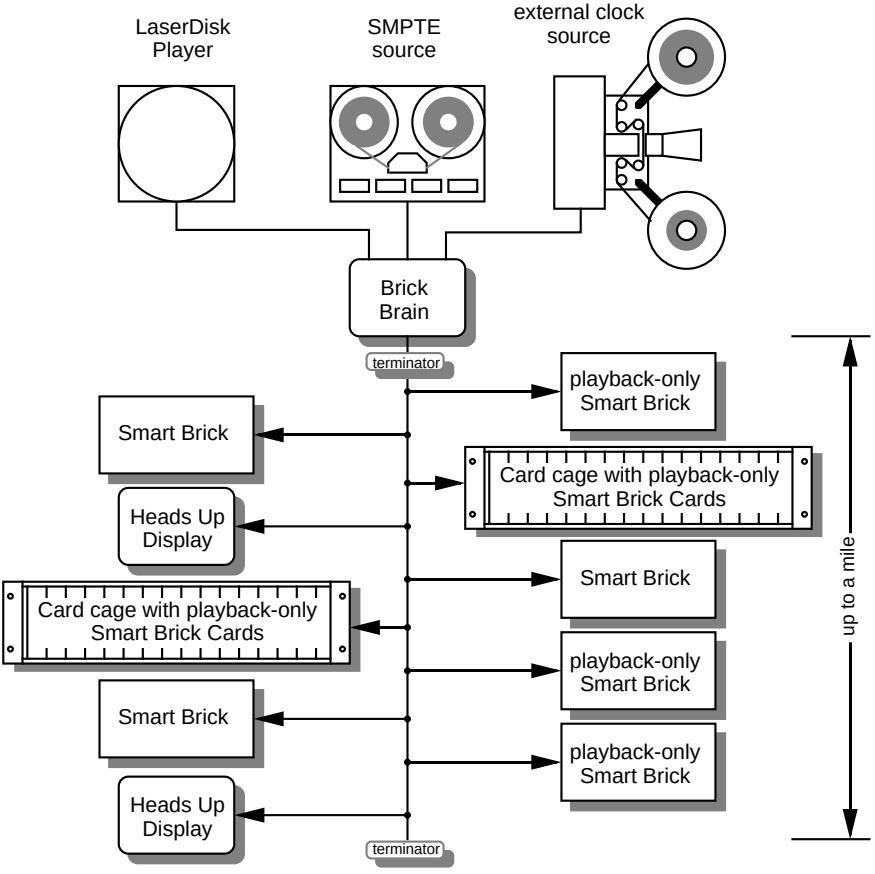

GILDERFLUKE & CO.• 205 SOUTH FLOWER STREET • BURBANK, CALIFORNIA 91502 • 818/840-9484 • 800/776-5972 • FAX 818/840-9485
EAST COAST/FLORIDA OFFICE • 7041 GRAND NATIONAL DRIVE • SUITE 128d • ORLANDO, FL. 32819 • 407/354-5954 • FAX 407/354-5955

Safety Disclaimer: Any electronic or mechanical system has a potential to fail. Certain applications using Gilderfluke & Company equipment may involve potential risks of death, personal injury or severe property or environmental damage ("Critical Application"). Gilderfluke & Company equipment is not designed, intended, authorized or warranted to be suitable in life support applications, devices or systems or other critical applications. Inclusion of Gilderfluke & Company products in such applications is understood to be fully at the risk of the customer. In order to minimize risks associated with the customer's applications, adequate design and operating safeguards should be provided by the customer to minimize inherent or procedural hazards.

Gilderfluke & Company assumes no liability for applications assistance, customer produced design, software performance, or infringement of patents or copyrights. Nor does Gilderfluke & Company warrant or represent that any license, either express or implied, is granted under any patent right, copyright, mask work right, or other intellectual property right of Gilderfluke & Company covering or relating to any combination, machine, or process in which Gilderfluke & Company products or services might be or are used.

The Parts of the Smart Brick System 1
- **BR-MultiBrick32 ..... 2**
- **BS-CRD 2**
- **BS-ANA 2**
- **BS-EFB 2**
- **BS-DMX-Tx 2**
- **BS-Serial 3**
- **BR-ZBR 3**

Time Bases 5
- **LaserDisk (or DVD) 5**
- **Smpte 6**
- **Internal Time Base 8**
- **External Time Base 9**

Smart Brick Configuration 10
- **6264LP RAM 11**
- **62256LP RAM 12**
- **27C64 Eprom 13**
- **27C128 Eprom 14**
- **27C256 Eprom 15**
- **27C512 Eprom 16**
- **27C010, 27C020, 27C040 or 27C080 Eprom 17**
- **Enabling the Outputs When Stopped 18**
- **Disabling the Outputs When Stopped 19**
- **DMX Forever! 20**
- **DMX On Occasion 21**

J-6 Digital Output Cables 23
- DC Drivers 26
- DPDT relay board 26
- Reed relay board 27
- I/O module 27
- Solid State Relay Fanning Strip 27

Smart Brick System Commands 29
- **Enter Interactive Echo Mode 34**
- **Exit Interactive Echo Mode 34**
- **Enter Global Echo Mode 35**
- **Exit Global Echo Mode 35**
- **Enter Echo All Mode 35**
- **Exit Echo All Mode 36**
- **Enter Echo Mode 36**
- **Exit Echo Mode 37**

Track Status Mode 37
Smart Brick Brain Status 38
Switch Status 39
Enter Setup Mode 39
Memory Address Status 40
J-6 Port Status 40
Download Configuration 40
Upload Configuration 42
Start Commands 42
Start Track 42
Start Global 42
Start Cocked 42
Start Group 43
Stop Commands 43
Stop Track 43
Stop Global 43
Stop Cocked 43
Stop Group 43
Reset Commands 43
Reset Track 43
Reset Global 43
Reset Cocked 43
Reset Group 43
Cock Track 44
Un-Cock Track 44
Un-Cock Global 44
Loop Commands 45
Loop Track 45
Loop Global 45
Loop Cocked 45
Loop Group 45
Stop at End Commands 46
Stop at End Track 46
Stop at End Global 46
Stop at End Cocked 46
Stop at End Group 46
Select Show Commands 46
Select Show Track 46
Select Show Global 46
Select Show Cocked 46
Select Show 46
Set Brick Address 47
Advance One Frame 47

Go Back One Frame 47

Summary of Serial Commands 48

Rack Smart Brick Brain 51

Rack Smart Brick Brain Connections 52

Rack Smart Brick Brain Messages 57

Rack Smart Brick Brain Configuration 61

Enter Track Number 63
Baud Rate 63
LD Serial Port 64
VT-52 Mode 64
Numbers 64
Show Storage 64
Respond to Group 65
Set Clock 65
InfraRed Mode 65
Coin-Op Mode 68
Select from J6 68
Direct Select 68
Debounce 69
Running Delay 70
Tape Deck Pulse 70
Error Count 70
On Startup 71
Immediate Jumps 71
Countdown Hold 72
Player Type 72
LaserDisk Time 72
Dropout Protection 72
Print Show Counters 73
Input Triggering Commands 74
'GREEN' Input Closing Edge 74
'GREEN' Input Opening Edge 74
'BLUE' Input Closing Edge 74
'BLUE' Input Opening Edge 74
'PB' Input Closing Edge 74
'PB' Input Opening Edge 74
'1/4 J6 Port' Input Closing Edge 74
'1/4 J6 Port' Input Opening Edge 74
Countdown End 74
Pause/Return to Zero (RTZ) 76

Continue/Increment 76
Start 77
Loop 77
Stop 78
Stop at End 78
Tape Deck 78
More..... 80
Load Defaults 80
Download Configuration 80
eXit Setup Mode 82

Rack Smart Brick Brain Show Menu 84
Show Name 85
Time Code 86
Brick Start 86
Brick End 86
At End of this Show 86
'Next' Show 88
Frame Rate 89
Early Starts 90
Start String 90
Multi-Disk String 91
End String 93
LaserDisk Starts 93
LaserDisk 1 93
LaserDisk 2 93
LaserDisk 3 93
LaserDisk 4 93
LaserDisk 5 93
LaserDisk 6 93
LaserDisk 7 94
Next Entry 94
Next In Sequence 94
Last Entry 94
Kopy Another Show 94
More..... 95
Load Defaults 95
Download Configuration 95
eXit Setup Mode 97

Rack Smart Brick Brain String Setup Menu 99
Alter Strings 100
More..... 100
Load Defaults 100

Download Configuration 101
eXit Setup Mode 103

Smart Brick Brain Delay Setup Menu 105
Set Delays 105
More..... 105
Load Defaults 106
Download Configuration 106
eXit Setup Mode 108

Smart Brick Brain 1/4 J6 Setup Menu 110
Input Triggering Commands 110
'1/4 J6 Port' Input Closing Edge 110
'1/4 J6 Port' Input Opening Edge 110
Pause/Return to Zero (RTZ) 112
Continue/Increment 112
Start 113
Loop 113
Stop 114
Stop at End 114
Tape Deck 114
1/4 J6 Input Triggering Commands 114
Bit 0 Input Closing Edge 114
Bit 1 Input Closing Edge 114
Bit 2 Input Closing Edge 114
Bit 3 Input Closing Edge 114
Bit 4 Input Closing Edge 114
Bit 5 Input Closing Edge 115
Bit 6 Input Closing Edge 115
Bit 7 Input Closing Edge 115
Sequentially 115
Randomly 115
Normally 116
Select from J6 116
Direct Select 116
More..... 117
Load Defaults 118
Download Configuration 118
eXit Setup Mode 120

Smart Brick Brain Schedule Setup Menu 123
Alter Entry 123
Next Entry 124
Last Entry 124

Kopy Entry **124**
More..... ..... **124**
Load Defaults **125**
Download Configuration **125**
eXit Setup Mode **127**

Smart Brick Brain Calendar Setup Menu **129**
Alter Entry **129**
Next Entry **130**
Last Entry **130**
Kopy Entry **130**
More..... ..... **130**
Load Defaults **130**
Download Configuration **131**
enter Keys **132**
eXit Setup Mode **133**

Brick Brain Lock Counter/Timer Setup **135**
Decrement on any show that plays 136
Decrement when a specific show plays 136
Decrement on each minute 136
Decrement on each hour 137
Tampering 137
Lock Configuration 137

Smart Brick MiniBrain **141**
Brick Memory Size **143**
Brick Memory Size **143**
Brick Memory Size **143**
Double Show **144**
Frame Rate **144**
Stop On Green Opening **145**
Run Continuous **145**

Heads Up Display **147**
Error Messages **148**
Brick Overflow 148
Smpte Time Code Error 148
End Of Show 148
String Error 148
Invalid Frame Rate 148
LaserStart Error 149
LaserLoop Error 149
Start Error 149

Response Error 149
Call Home 149
Sending String 150
Starting LaserDisk (or DVD) 150

Start and End Strings 153

SPECIAL STRING CHARACTERS 154
End-O-String: (00) 154
LaserSearch: (01) 154
PB: (02) 154
Blue: (03) 154
Green:(04) 155
Stop: (05) 155
Play: (06) 155
Rewind: (07) 155
LaserSearch for CLV LaserDisks (or DVD)s: (08) 156
LaserSearch for CLV LaserDisks (or DVD)s: (09) 156
Don't Care: (80h) 156
ASCII Characters to be Sent Out 157
ASCII Characters to be Received 158
PIONEER LaserDisk (or DVD) Commands 161
SONY LaserDisk Commands 167
Panasonic LaserDisk Commands 173

HEXadecimal to Decimal to Percentage 178

This page was left blank too

- The Parts of the Smart Brick System -

The Smart Brick System is a modular Animation Control System which consists of One Smart Brick Brain and any number of Smart Bricks attached to it. Since the number of Smart Bricks attached to each Smart Brick Brain is unlimited, Animation Control Systems of any size to be assembled just by plugging them together.

Smart Brick Systems can be used to control animated shows and displays, fountains, fireworks, lighting, sound systems, simulators, slide and movie projectors, fiber optics, window displays, motors, pneumatic and hydraulic systems, special effects, signs, machines and machine tools in process control, etc. .....

The **Smart Brick Brain** is a small microprocessor controlled unit which can synchronize any number of Smart Bricks to a LaserDisk (or DVD) player, Smpte time code, internal time base, or external time base. In addition it can control the LaserDisk (or DVD) player or tape deck and provide a real time clock or countdown timer for the delay between shows. For all but the Smpte time code, it can instantly randomly access any show stored in the system (Smpte synchronized shows are slaved to whatever show the Smpte time code is requesting). At the end of any show it can automatically jump to any other show, either with or without a user adjustable delay before playing this next show. If it is already playing a show and it gets a request for another show, it can be told to ignore the request, store it until done with the current show, or jump to it immediately.

A MiniBrain can be used if you don't need to synchronize your show with an external time code or randomly access more than two shows.

Smart Brick Brains are attached to the Smart Bricks by up to a mile of six conductor modular telephone wire. (This is the same type of wire and connector as found on the standard Bricks, but is incompatible with the signals which they use.) Just about any number of Smart Bricks can be attached to a single Brain (If the wire runs are long and there are a lot of Smart Bricks attached, a repeater may be required in the line.) Make sure that this cable does not have its wires flipped from one end to the other. If the wire run is long, then a terminator should be installed at the two extreme ends of the line.

The Smart Bricks are available in a variety of configurations to suit your needs:

- **BR-MultiBrick32:** Thirty-two output Program-in-Place Brick.
- **BS-CRD:** thirty-two output playback-only Smart 'Brick' card. For mounting in card cages or on standoffs. Shows are stored in Eprom.
- **BS-ANA:** Analog Output Smart Brick card. Features sixteen 0-10 volt and two hundred fifty-six channels of DMX-512 output. Runs from DMX-512 input or onboard show data EPROM. (Refer to the BS-ANA manual for details on this product.)
- **BS-EFB:** Four Channel Electronic FeedBack Smart Brick card. Runs from DMX-512 input or EPROM.
- **BS-DMX-Tx:** DMX-512 output Smart Brick. Sends two hundred fifty-six channels for controlling lighting equipment.

(Refer to the BS-DMX-Tx & BS-Serial manual for details on this product.)

- **BS-Serial:** As above, but upgraded to control MIDI, Moog Motion Bases, Rexroth feedback cards, Stepper controllers, etc. (Refer to the BS-DMX-Tx & BS-Serial manual for details on this product.)
- **BR-ZBR:** Z-Brick card for use with BS-ANA, BS-DMX-Tx, BS-Serial or BS-EFB to add thirty-two digital outputs. Card cage mounted. (Refer to the BS-ANA or BS-DMX-Tx & BS-Serial manual for details on this product.)

The Smart Brick System is completely modular. If one Smart Brick doesn't have enough outputs, you simply add more, stacking them until you have enough outputs to do the job.

The Smart Bricks can all be located at one or more central locations, or they can be built right into whatever it is they are controlling. This latter method allows you to wire an entire attraction by just stringing up a six conductor modular telephone line to connect all your figures. It also allows you to remove a figure's animation system along with the figure when it is removed for maintenance, and then run them both on a service bench away from the rest of the show for testing and adjustment. A Smart Brick System can consist of any combination of record/playback Smart Bricks, playback-only Smart Bricks and card cage mounted Smart Bricks.

In most cases the Smart Brick system is programmed using a PC·MACs Animation Control System. Once programmed the show is downloaded to the Smart Brick(s) and the Smart Brick Brain configured to match the

show(s).

Playback-only Smart Bricks store their data in Eprom type memory chips. This is about the safest way known to store any type of data. One Eprom is used to store each individual eight bit wide channel, which means that when you have to perform a minor change in one output, you don't have to replace all the Eproms in the system. Some newer Smart Bricks store the animation data in Flash Eproms. These can be programmed in place by sending the data to the Smart Bricks through their serial ports.

Quick Start:

When shipped, the Smart Brick Brain is usually configured to start playing show number one when the 'manual start' pushbutton on its front is pressed. This show is set up to clock from the internal time base at thirty frames per second. To see the system work, attach some Smart Bricks to the Smart Brick Network connector on the Smart Brick Brain and plug everything in. When you push the 'manual start' pushbutton, you should see the system start clocking through the frames. Each time you push the 'manual start' button, show number one should start over from its beginning.

- Time Bases -

The Smart Brick System can be used with four normal time bases. If the frame rate is the same for all shows, you can use any of the time bases within the same system. The supported time bases are:

1) **LaserDisk (or DVD):** The Smart Brick Brain has an RS-422 serial port on it which can be attached to the serial port on many professional quality LaserDisk (or DVD) players. The Smart Brick Brain talks to the LaserDisk (or DVD) player to synchronize the entire system to the show being played. All control for the LaserDisk (or DVD) player is provided by the Smart Brick Brain. Systems with LaserDisk (or DVD) players in them are limited to running either fifteen, twenty-five or thirty Frames Per Second (FPS), as these are the frame rates for the video reproduction.

   The LaserDisk (or DVD) players which are currently supported are the Pioneer 'LD-', Sony 'LDP-' and selected Panasonic players. The Pioneer LaserDisk (or DVD) code was developed and tested on an LD-V8000, which is Pioneer's top of the line unit. It should be compatible with all of the earlier models in this series as well. The advantages of the LD-V8000 are: four audio channels (two analog and two digital), frame memory during random access, separate front panel controls, and faster access times than all of its predecessors.

   The Sony LaserDisk code was developed and tested on an LDP-2000. It should be compatible with all of the other models in this series as well.

   If more than a single LaserDisk (or DVD) is to be controlled from a single Smart Brick System, then a LaserDisk Multiplexer must be used. Each of these allow seven LaserDisk (or DVD) players to be connected to the Rack

Smart Brick Brain.

LaserDisks are available in two different recording formats. These are Constant Angular Velocity (CAV) and Constant Linear Velocity (CAV). Either can be made to work, but the CAV format is preferred. It is the only format in which all of the LaserDisk players' commands are supported

2) Smpte: (pronounced "SIMP-T") is a time code which was developed by the Society of Motion Picture and Television Electronics for use in audio, film, and television production. It is normally recorded on a spare audio track on the medium being used (audio tape, video tape, or film), and then used to synchronize various pieces of compatible equipment together. As an industry standard, virtually every audio, video or film studio will have the equipment to lay down a Smpte time code track.

Smpte is usually recorded at thirty frames per second (although twenty-five frames per second is used in Europe and places where this is the normal television frequency, and twenty-four frames per second is occasionally used in film production). What this means is that thirty (or twenty-four or twenty-five) times each second a number is recorded on the tape or film which represents the hours, seconds, minutes and frame (00:00:00.00) represented by this particular little stretch of medium. Since each little stretch is represented by a unique number, Smpte is known as an 'absolute' time code. No matter where the tape is, the Smart Brick Brain will instantly evaluate the numbers it gets from the Smpte time code, and play the appropriate animation data.

With Smpte synchronized shows, the Smpte 'hour' is used to tell the Smart Brick Brain which show it is actually

running. The 'hours' Smpte supports are 00 through 23 to give you twenty-four possible Smpte synchronized shows (Smpte hour '00' is mapped to show number '24' by the Smart Brick Brain, since 00 isn't a valid show number). Any individual show can be as long as an hour. When told to start running a Smpte show, the Smart Brick Brain will start listening for any Smpte coming in. When it picks up a good Smpte signal, it looks at the 'hour', and then checks to see if it is the number of a Smpte synchronized show, and if so, plays it. Note that if the show number the Smart Brick Brain expects to be played when it starts listening for the Smpte is not the show number it actually receives, it will play the latter. If the show number it receives isn't assigned as a Smpte show, then it will display an error message on the Heads Up Display and not play anything. For this reason random access commands for Smpte synchronized shows are somewhat at the mercy of whatever Smpte hour is actually received from the Smpte source.

If more than twenty-four Smpte synchronized shows are required, you can use an output from the animation system to stop the system 'mid show'. This technique can be used to break up a single long show into as many shorter sequences as you would like.

Since Smpte is often provided by an audio or video tape deck, the Smart Brick Brain has three outputs which can be programmed to send signals to the tape deck at the beginnings and ends of the shows. These are typically used to start, stop and rewind the tape deck. These outputs are simple relay closures, which can usually be attached directly to the remote control inputs on a tape deck.

Frame rates supported by the Smart Brick Brain are

fifteen or thirty FPS when using Smpte recorded at thirty FPS, twenty-five FPS when using Smpte recorded at twenty-five FPS, and twelve or twenty-four FPS when using Smpte recorded at twenty-four FPS. All type of Smpte must be recorded 'non-drop frame' for compatibility with the Smart Brick Brain.

Smpte is a type of time code which is prone to minor errors. The Smart Brick Brain automatically bridges over these until it gets a number of consecutive consistent Smpte frames. You can set the size of this number when configuring the Smart Brick Brain to anywhere from one to two hundred fifty-six consecutive frames.

3) **Internal Time Base:** If there is no need for synchronization to an audio or video source, you can use the crystal controlled time base in the Smart Brick Brain to clock the entire system. This type of show is often used for chase sequences, test shows, when you just don't need to synchronize a show to anything else, or to keep the figures moving between the main Smpte or LaserDisk (or DVD) synchronized shows. Frame rates supported are:

1 FPS
2 FPS
4 FPS
5 FPS
8 FPS
10 FPS
12 FPS
15 FPS
16 FPS
20 FPS
24 FPS
25 FPS
30 FPS

32 FPS
50 FPS
60 FPS
64 FPS
75 FPS
100 FPS)

4) **External Time Base:** This is generally used when you need to tie the Smart Brick System to an external clock. Typical uses of external time base sync are to lock the system to a mechanical device like a motion picture camera or projector so that it will follow at any speed, or to synchronize two incompatible systems so that data can be transferred between the two. Frame rates supported are from one to one hundred FPS (this is simply the number of frames displayed on the Heads Up Display, as the actual rate will follow whatever clock rate is fed to the Smart Brick Brain).

- Smart Brick Configuration -

The majority of the configuration for the Smart Bricks is handled in the Smart Brick Brain. The exceptions to this are those jumpers which set the size and type of memory used in each Smart Brick, and whether or not you would like the outputs from a Smart Brick to be disabled when ever the system is not advancing frames.

The one jumper which the Smart Bricks have on them retain the same callout as are used in the normal Micro MACs Bricks. All configuration is done on JP-2. The two things which Smart Bricks must be configured for are the memory size and type and the 'enable/disable when stopped'.

In all of the following drawings, the jumper pins are shown as circles contained within an outline of the header assembly. Pins which are used for a given configuration are shown as filled-in, while those which remain hollow are not being used. The jumper plugs (used for connecting adjacent pins)or wires (used for connecting pins which are not adjacent) which connect the pins are shown as black lines. Any pin which is shown filled in with black, but which does not have any wire or jumper plug shown on it, must have all wires and/or jumper plugs removed from it in the actual Smart Brick you are configuring.

- 6264LP RAM -

To configure a Record/Playback Smart Brick for use with 6264LP static RAM Chips for a capacity of 16,384 (16K) frames. As shown, the RAM chips must be 'South' justified, leaving four unused holes at the top of each socket.

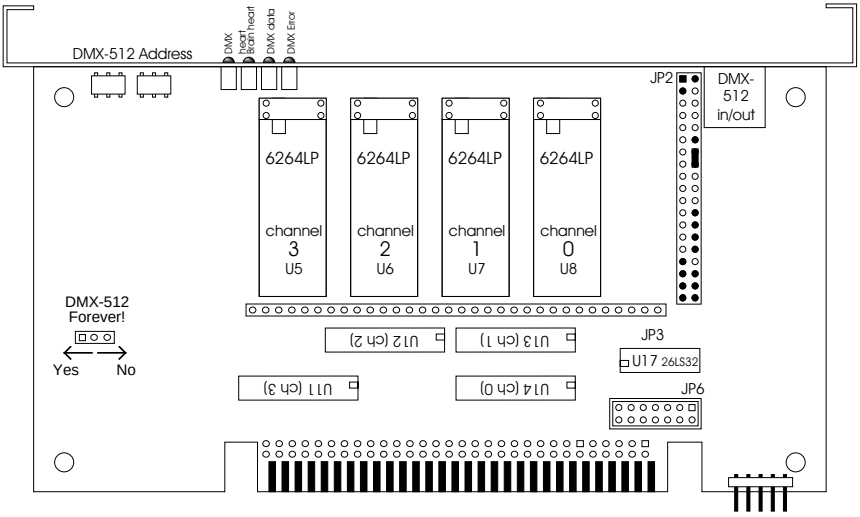

- 62256LP RAM -

To configure a Record/Playback Smart Brick for use with 62256LP static RAM Chips for a capacity of 65,536 (64K). As shown, the RAM chips must be 'South' justified, leaving four unused holes at the top of each socket. This configuration requires a wire wrapped jumper.

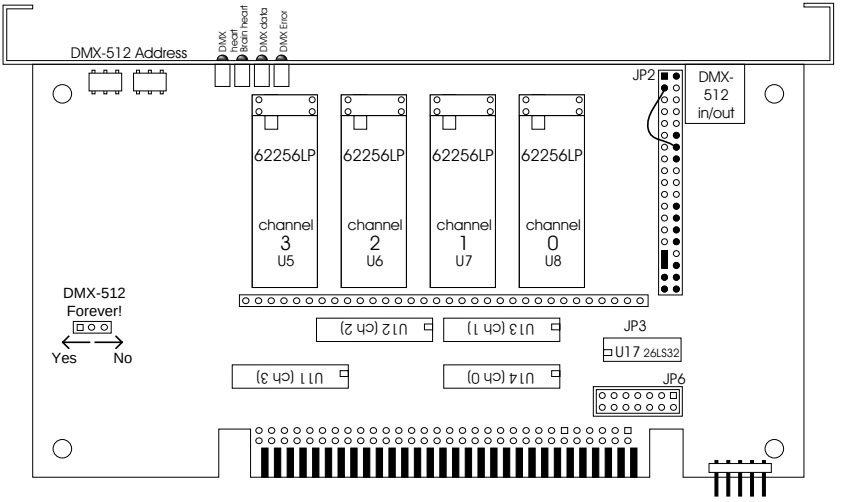

- 27C64 Eprom -

To configure a Playback-only Smart Brick for use with 27C64 Eprom Chips for a capacity of 8192 (8 K) frames. The Eprom chips must be 'South' justified, leaving four unused holes at the top of each socket.

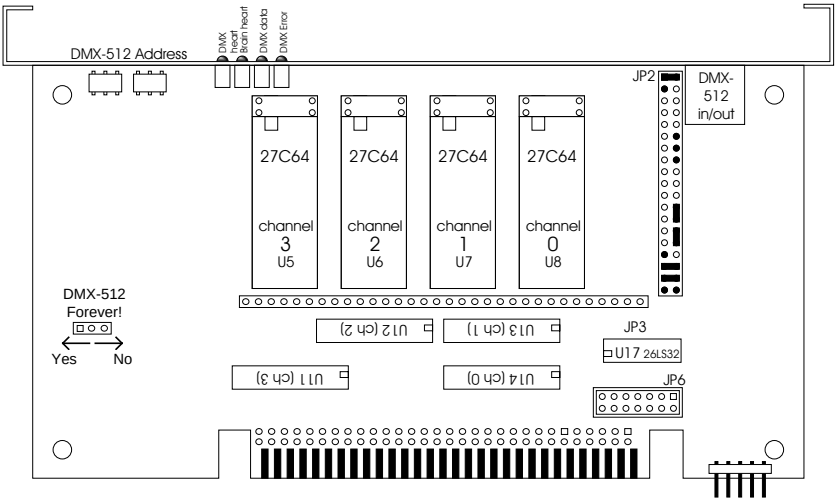

- 27C128 Eprom -

To configure a Playback-only Smart Brick for use with 27C128 Eprom Chips for a capacity of 16,384 (16K) frames. The Eprom chips must be 'South' justified, leaving four unused holes at the top of each socket.

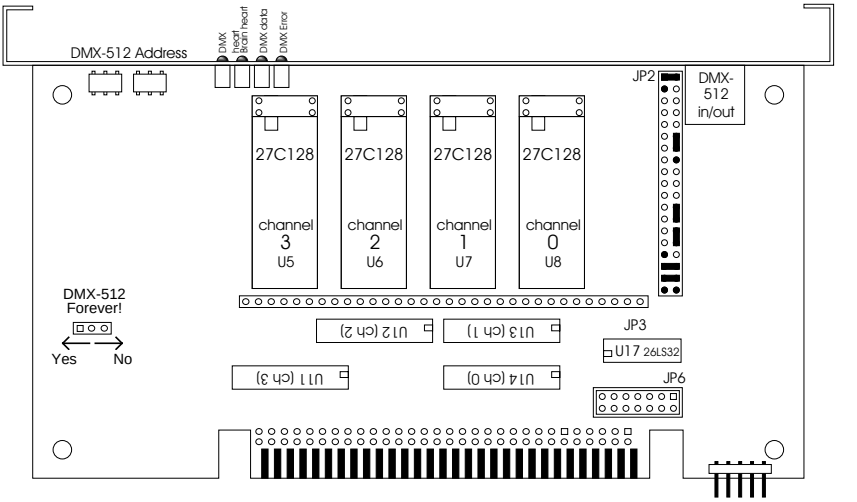

- 27C256 Eprom -

To configure a Playback-only Smart Brick for use with 27C256 Eprom Chips for a capacity of 32,768 (32 K) frames. The Eprom chips must be 'South' justified, leaving four unused holes at the top of each socket.

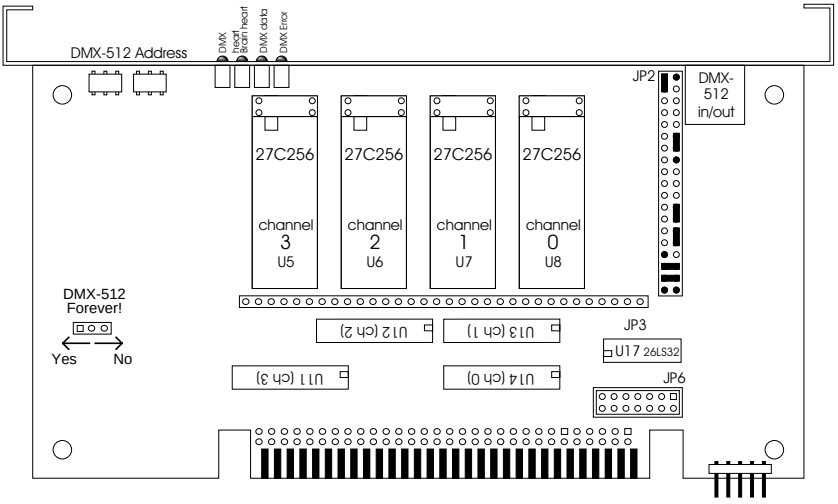

- 27C512 Eprom -

To configure a Playback-only Smart Brick for use with 27C512 Eprom Chips for a capacity of 65,536 (64K) frames. This is the default memory configuration for Smart Bricks. The Eprom chips must be 'South' justified, leaving four unused holes at the top of each socket.

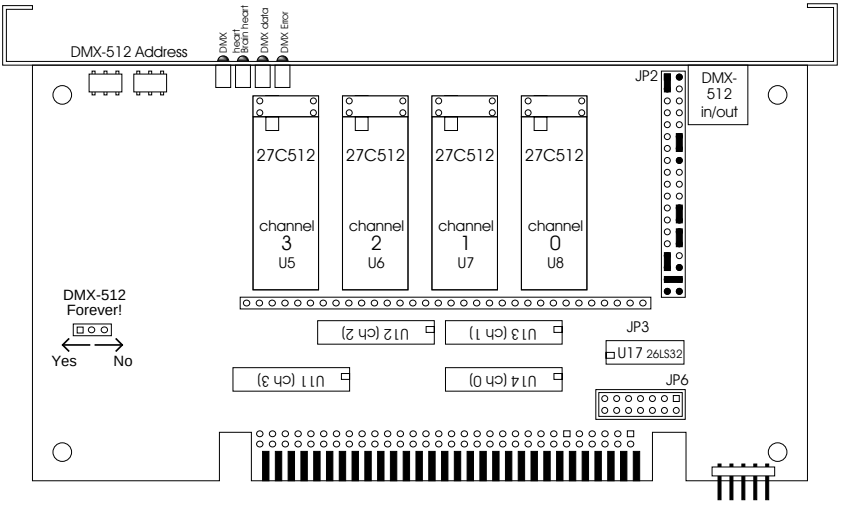

- 27C010, 27C020, 27C040 or 27C080 Eprom -

To configure a Playback-only Smart Brick for use with:

27C010 Eprom for a capacity of 131,072 (128 K) frames
27C020 Eprom for a capacity of 262,144 (256 K) frames
27C040 Eprom for a capacity of 524,288 (512 K) frames
27C080 Eprom for a capacity of 1,048,576 (1024 K) frames

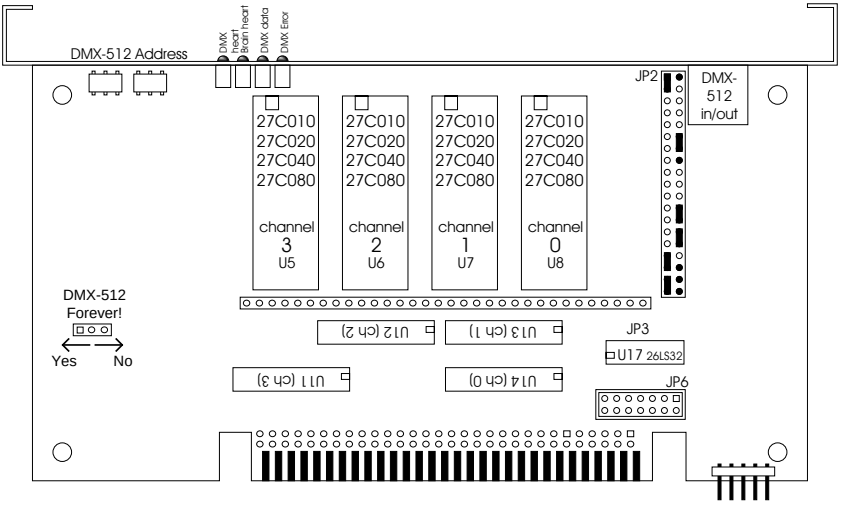

- Enabling the Outputs When Stopped -

This jumper plug must be installed for the Smart Brick to work. It has two possible positions. This position should be used if you want the outputs to be active at their programmed levels, even when the system is not advancing frames. This is used if you don't care that some outputs might stay on even when the system is no longer advancing frames. It is almost always used if there are any analog functions attached to a Smart Brick, as disabling the outputs which feed a D/A converter would cause it to slam to one of it's extremes.

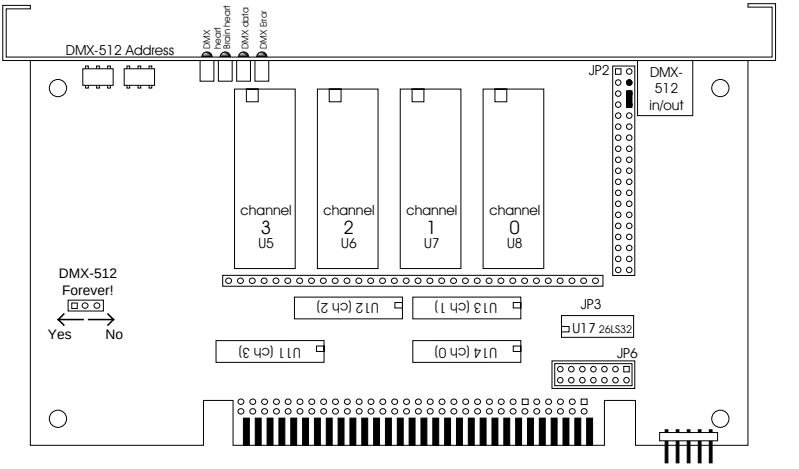

- Disabling the Outputs When Stopped -

This jumper plug must be installed for the Smart Brick to work. It has two possible positions. This position will cause all of the outputs to turn off whenever the Smart Brick System stops advancing frames and the 'running delay' counter has run out. This is useful if damage might result from leaving certain outputs in your system turned on indefinitely, as could occur if the system were stopped while those outputs were active.

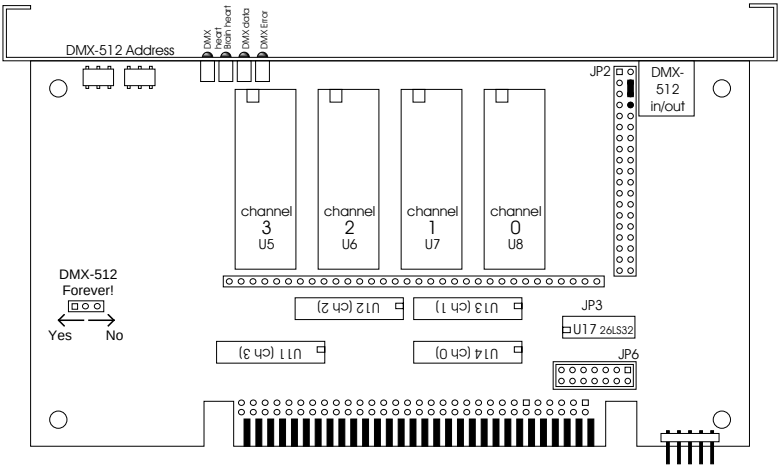

- DMX Forever! -

This jumper plug is available only on Smart Bricks that have the DMX-512 option installed. If set to 'Yes', data on the outputs retains the last DMX-512 data that was received until new DMX-512 data is received.

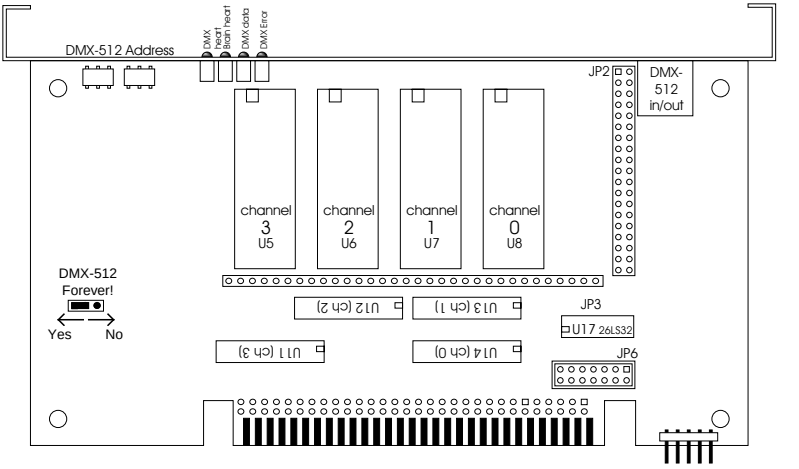

- DMX On Occasion -

This jumper plug is available only on Smart Bricks that have the DMX-512 option installed. If it is in the 'NO' position, the card reverts to outputting data from the on-board Eproms when the DMX-512 signal goes away.

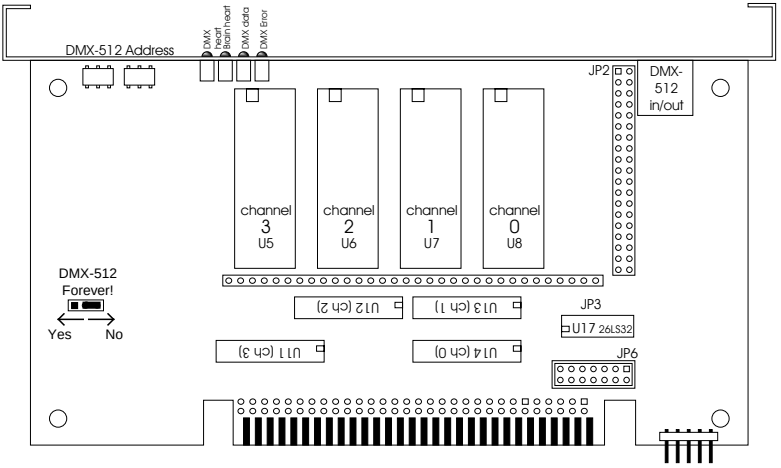

Is this the second or third blank page?

- J-6 Digital Output Cables -

In all animation systems made by Gilderfluke & Company all input and output cabling on the Smart Bricks is through what we call 'J-6' standard output cables. These are 40 wire cables which are made up of four identical eight bit wide 'channels'. A J-6 cable is often split up into four individual channels. As each channel also includes a common power supply and ground wire, each '1/4 J-6' cable is made up of ten wires, and can be used to control eight individual 'digital' (off/on) devices, or one eight bit wide 'analog' device.

In all animation systems made by Gilderfluke & Company, all outputs are open collector switches to ground, and all inputs are opto isolators. Flyback diodes are included in the outputs for driving inductive loads:

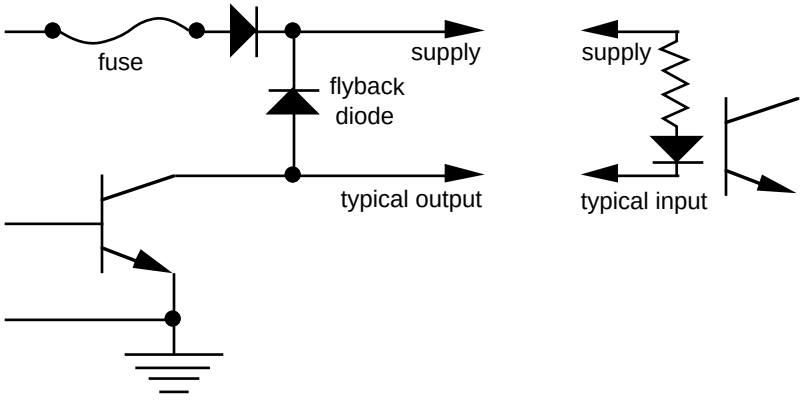

To simplify wiring to any MACs animation system, the connectors used on the J-6 cables are what are called 'insulation displacement connectors'. These simply snap on to an entire cable, automatically 'displacing' the wire insulation and making contact with the wires within. This means that an entire 40 wire cable can be terminated in seconds. All connectors are polarized, to keep them from being plugged in backwards. Although there are tools made specifically for installing these connectors, the tool we find works best is a small bench vise.

Any eight digital devices or one eight bit analog device can be connected to any 1/4 J-6 cable as shown. The LED between the ground (pin #1 brown) wire and supply (pin #10 black) wire acts as an indicator which is lit if the fuse for that channel is OK:

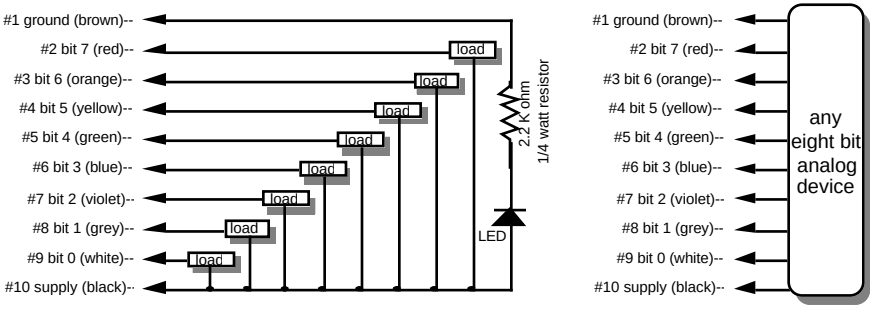

The supply line for each 1/4 J-6 is fused for one amp. You should treat each 1/4 J-6 as an individual, and not cross the outputs or supply lines from one channel to the lines from any other channel. Doing this won't cause any damage, but can reduce the protection for the outputs that the fuses normally provide.

Each J-6 cable is arranged in the following order:

wire number	color	wire function
1	brown	circuit ground
2	red	channel 0 data bit 7
3	orange	channel 0 data bit 6
4	yellow	channel 0 data bit 5
5	green	channel 0 data bit 4
6	blue	channel 0 data bit 3
7	violet	channel 0 data bit 2
8	gray	channel 0 data bit 1
9	white	channel 0 data bit 0
10	black	+ unregulated power supply (fused for 1 amp)
11	brown	circuit ground
12	red	channel 1 data bit 7
13	orange	channel 1 data bit 6
14	yellow	channel 1 data bit 5
15	green	channel 1 data bit 4
16	blue	channel 1 data bit 3
17	violet	channel 1 data bit 2
18	gray	channel 1 data bit 1
19	white	channel 1 data bit 0
20	black	+ unregulated power supply (fused for 1 amp)
21	brown	circuit ground
22	red	channel 2 data bit 7
23	orange	channel 2 data bit 6
24	yellow	channel 2 data bit 5
25	green	channel 2 data bit 4
26	blue	channel 2 data bit 3
27	violet	channel 2 data bit 2
28	gray	channel 2 data bit 1
29	white	channel 2 data bit 0
30	black	+ unregulated power supply (fused for 1 amp)
31	brown	circuit ground
32	red	channel 3 data bit 7
33	orange	channel 3 data bit 6
34	yellow	channel 3 data bit 5
35	green	channel 3 data bit 4
36	blue	channel 3 data bit 3
37	violet	channel 3 data bit 2
38	gray	channel 3 data bit 1
39	white	channel 3 data bit 0
40	black	+unregulated power supply (fused for 1 amp)

The current Output Capacity of a each output is as shown in the following chart:

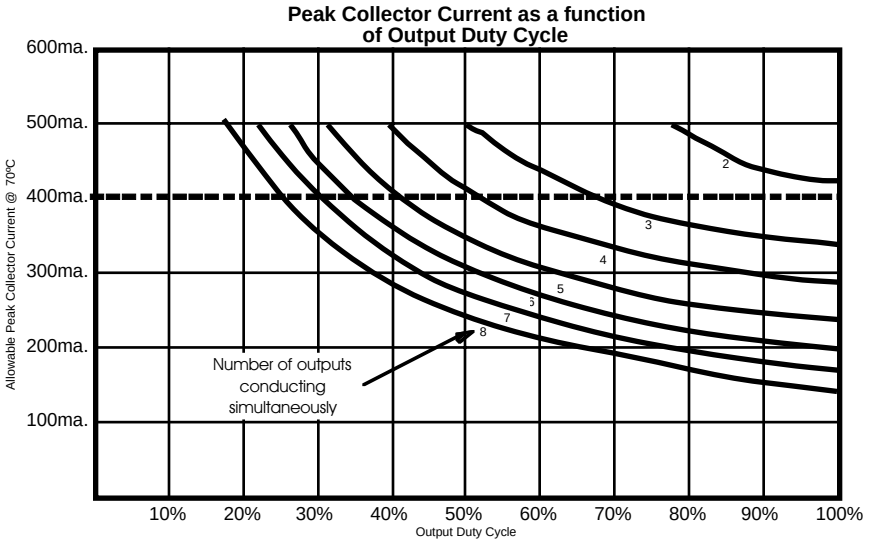

Since it is unusual to have more than 50% of the outputs on at any one time, you can usually assume the system has a 250 ma output current capacity. If you are going to be turning on lots of heavy loads at the same time, you should derate this to 150 ma.. This is sufficient to drive the majority of loads which will be directly connected to the outputs of the animation system. If additional current capacity is needed, or if you need to drive higher voltage loads, you can connect relays as needed to the outputs of the animation system. Coincidentally, boards for doing this are available from Gilderfluke & Company. These include:

DC Drivers: These are a series of eight channel high current DC drivers manufactured by Gilderfluke & Company. Outputs capacities range from 700 ma. to 3.5 amps per output.

DPDT relay board: A set of eight electromechanical relays with double pole/double throw contacts rated at 5 amps each.

Reed relay board: A set of eight small electromechanical relays with normally open contacts rated at 150 ma each.

I/O module: A set of eight small solid state relays with normally open contacts rated at 3.5 amps each (AC and DC relays available).

Solid State Relay Fanning Strip: For connecting up to eight popular 'hockey puck' style relays to a 1/4 J-6 output cable. These are available with capacities of up to 75 amps each.

Is this the third or fourth blank page?

- Smart Brick System Commands -

The MACs Smart Brick System can be controlled by simple switch closures to start and stop playback or cycling, randomly select shows, and perform a variety of functions. The Rack Mounted Smart Brick Brain can also start shows based on the time of day or countdowns between shows. In addition, you can talk to any combination of up to two hundred fifty-six Smart Brick Systems and Digital Audio Repeaters at one time through a serial data line from your computer, terminal, or control system.

This same serial port must be used to configure the features of any Smart Brick System, and is used by the system when it needs to talk to a LaserDisk (or DVD) player or any other serially controlled device. The latter limits the use of the serial port to those systems which are not controlling LaserDisk (or DVD) players.

All commands sent to the MACs Smart Brick System through its serial interface take the following format. All characters are sent in ASCII. All numeric values are sent in HEXadecimal (HEX for short), and consist of one or more ASCII characters (0-9, A through F). The case (as in upper and lower) of all input is important. A lower case 'a' signifies a command, while an 'A' is a numeric value. If the Smart Brick System receives another command while it is waiting for additional input needed to complete the previous command, it will abandon the previous command and start working on the new one.

In the following documentation any input you will send to the audio system is shown in outline. The response to a command is shown in italics.

If the Smart Brick System is in a mode where you expect to receive some response from it (generally in one of the echo modes), you must wait to receive all of the characters you are expecting before sending the system a new command. The reason for this is that you are actually talking to up to two hundred fifty-six microprocessors at a time, and if you issue a command

which gives a response from one Smart Brick Brain, and then a command which gives a response from a second Smart Brick Brain before the first has finished, then the two may try and output data at the same time. This won't cause any damage, but may result in garbled data at the receiver.

It is also possible to overload the Smart Brick System with too many commands through the serial port. You don't want to take too much time away from the Smart Brick Brain to service the serial port.

To communicate with the Smart Brick System through the serial port, you can use just about any computer or terminal which has a serial port on it. Most modern computer designs, like the Apple Macintosh, come with serial ports which are directly compatible with the RS-422 / RS-485 signal levels the Smart Brick System wants to see. These signal levels are close enough to be used with the RS-232 signal levels found on most old-fashioned computers (like IBMs and compatibles) with only a simple adapter cable, so long as the wire isn't too long and you don't have too many devices on the same line. To gain the full advantage of the RS-422 / RS-485 signal levels you will need to use a signal level adapter.

If you are using a computer as a terminal you will need to run a modem or terminal emulation program. Virtually any one should work. These will send everything you type on the keyboard out the serial port on your computer while printing on the screen anything which comes in from the Smart Brick Brain through the serial port. A modem program will usually have the advantage over a terminal emulation program in that it will allow you to save data to your computer's disk drives and then send it back to the audio system at a later date. The Smart Brick System uses no screen control codes or ESCape sequences, so it will work on any machine with a 80 column by twenty-four line display. Machines with other display formats will also work, but may not look so neat

on the screen.

When configuring your modem program, you should set it for 9600 baud, eight data bits, one stop bit, and no parity. Higher or lower baud rates can be used if you configure the Smart Brick Brain's serial port to run at a different speed. You should set your program not to insert an extra LineFeed (LF) character after each Carriage Return (CR) it receives. If you are going to be downloading configuration strings to the system (command 's'), you will also need to tell the modem program to put a slight delay between each character sent in order to not over run the Smart Brick Brain's incoming data buffer.

If you have hooked up the Smart Brick Brain to your computer and it still doesn't seem to respond to the keyboard, the first thing to check is that you are attached to the correct serial port. The easiest way to check this is to disconnect the Smart Brick Brain and short between the Tx data out and Rx data in pins on the serial port connector on the back of your computer. On all IBMs and compatibles this means sticking a paper clip or similar tool between pins 2 and 3 on the 'Com.' connector. While still running the modem program, anything you type should be shown on the screen while this paper clip is in place, while nothing will appear when you remove it. If your computer passes this test, then you are using the right serial port and the problem is most likely the baud rate setting or in your wiring to the Smart Brick Brain. If you get characters on the screen even with the paper clip removed from the serial port, it means you probably need to set the 'echo' mode to 'none' or 'full duplex' and try this test again.

The Smart Brick Brain uses a six position RJ-11 modular telephone style connector for the serial data. This is the same style of connector and pin out as is used on the AB-100 Digital Audio Repeaters. Facing the end of the cable with the release latch upwards, its pin out is as follows:

	pin #	COLOR	SIGNAL NAME:
(left)	1)	WHITE:	signal ground
	2)	BLACK:	- serial data out from Brick Brains
	3)	RED:	+ serial data out from Brick Brains
	4)	GREEN:	- serial data in to Smart Brick Brains
	5)	YELLOW:	+ serial data in to Smart Brick Brains
(right)	6)	BLUE:	signal ground

To cross wire the RS-422 / RS-485 signals from the Smart Brick System to the RS-232 serial port of an IBM compatible or Pioneer LaserDisk (or DVD) player, cross connect the signals as follows:

IBM DB-25	IBMPioneer LaserDisk (or DVD) DE-9	DB-15	SIGNAL	SIGNAL FROM/TO Smart Brick Brain
2	3	2	DATA OUT	- Rx data in to Brick Brain (GREEN)
3	2	3	DATA IN	- Tx data out from Brain (BLACK)
7	51, 11 or 15		GROUND	signal ground (BLUE or WHITE)

Apple Macintosh computers have true RS-422 serial ports built in. To connect to the Smart Brick System, the pin out is as follows for a Macintosh mini-DIN-8:

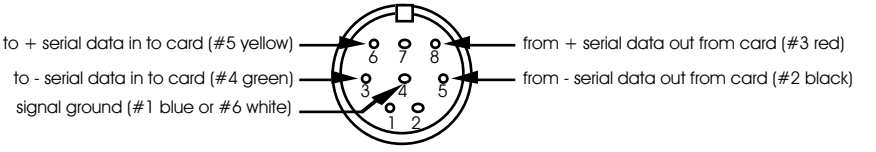

The Smart Brick System expects to see the serial data in the following format:

ONE START BIT

EIGHT DATA BITS

TWO STOP BITS

There are a number of methods which you can use to access a number of Smart Brick Brains and Digital Audio Repeaters at the same time. If you are controlling the animation and audio

systems through the serial input, you can use any or all of them as best suits your application. They are

1) **Global -** Any command of this type affects all of the Smart Brick Brains in the system.

   EXAMPLE: A '**START GLOBAL**' command will start all of the Smart Brick Brains and Digital Audio Repeaters in the system.

2) **Track Specific -** Only the one Smart Brick Brain addressed by the command is affected by this type of command. Each Smart Brick Brain and Digital Audio Repeater card in the system must be configured to respond to different **TRACK NUMBER** address in order for the system to operate properly.

   EXAMPLE: A '**START TRACK#'** command will start only the one Smart Brick Brain or Audio Repeater card addressed by the **TRACK#** in the command.

3) **Cocked -** You can set a flag on any number of different Smart Brick Brains and Audio Repeater cards in the system which, when set, will cause those cards to respond to commands of this type. Once a cocked command is issued, the cocked flag on all the cards will be reset.

   EXAMPLE: A '**START COCKED**' command will start only those Smart Brick Brains and Digital Audio Repeaters which have had their '**COCKED**' flags set by the **COCK TRACK#** command.

4) **Group -** Any number of different Rack Smart Brick Brains and Audio Repeater cards in the system can be set to respond to one of sixteen different 'Groups'. Any of the group commands can access any number of cards simultaneously.

   EXAMPLE: A '**START GROUP 5**' command will start only those Smart Brick Brains and Digital Audio

Repeaters which respond to group number 5.

- Commands -

"a" (track#) Enter Interactive Echo Mode:

This command puts the one Smart Brick Brain addressed by the **TRACK#** into this mode while taking all other Smart Brick Brains out of this mode. This is a special mode which lets you play with the command structure of the Smart Brick System and get an echo of all commands in plain English. This form of echo should normally be used only while manually manipulating the system as it can take a relatively long time to echo the 20 to thirty ASCII characters most commands will return when in this mode. During this response time, no additional commands should be given.

When in this mode, all commands are echoed by the one Smart Brick Brain which was addressed by the **TRACK#** used when this mode was entered. This means that any command will be echoed, even if the command is being sent to a nonexistent Smart Brick Brain.

EXAMPLE: to put Smart Brick Brain 00 into **SETUP ECHO** mode:

a00

TRACK 00 Setup Mode Selected

EXAMPLE: a '**START GLOBAL**' command will echo:

'GLOBAL START'

"b" Exit Interactive Echo Mode:

This command takes all Smart Brick Brains in the system out of **SETUP ECHO MODE**.

EXAMPLE: to take any and all Smart Brick Brains out of **SETUP ECHO** mode:

b

"c" (track#) Enter Global Echo Mode:

This command puts the one Smart Brick Brain addressed by the **TRACK#** into this mode while taking all other Smart Brick Brains out of it. The one Smart Brick Brain which is in this mode will echo all non-track-specific commands accepted by the system. This type of echo can be used in an automated system to assure that the Smart Brick System has received any non-track-specific command. Note that since only one Smart Brick Brain in the system is in this mode at a time, that this form of echo only verifies the operation of this one Smart Brick Brain and no other parts of the system.

EXAMPLE: to put Smart Brick Brain 00 into **GLOBAL ECHO** mode:

c00

EXAMPLE: a '**START GLOBAL**' command 'u' will echo the actual character used to select it '*u*'.

"d" Exit Global Echo Mode:

This command takes all Smart Brick Brains in the system out of **GLOBAL ECHO MODE**

EXAMPLE: to take any and all Smart Brick Brains out of **GLOBAL ECHO** mode:

u

"e" (track#) Enter Echo All Mode:

This command puts the one Smart Brick Brain addressed by the **TRACK#** into this mode while taking all other Smart Brick Brains out of this mode. The one Smart Brick Brain which is in **ECHO ALL MODE** echoes any and all characters sent to the Smart Brick Brain through the

serial port. This type of echo can be used to verify that the Smart Brick System has received all characters sent to it. Note that since only one Smart Brick Brain in the system is in this mode at a time, that this form of echo only verifies the operation of this one Smart Brick Brain and no other parts of the system.

EXAMPLE: to put Smart Brick Brain 00 into **ECHO GLOBAL** mode:

e00

EXAMPLE: a typing random characters 'apiuryhqpfnhsdflauthf' will echo:

apiuryhqpfnhsdflauthf

"f" Exit Echo All Mode:

This command takes all Brick Brains in the system out of **ECHO ALL MODE**.

EXAMPLE: to take any and all Brick Brains out of **ECHO ALL MODE**:

f

"g" Enter Echo Mode:

This command puts all the Smart Brick Brains in the system into **ECHO MODE**. When in this mode, the characters used to select all track-specific commands are echoed by the Smart Brick Brain addressed by the command. This is the type of echo mode which best verifies the proper operation of all the Smart Brick Brains in the Smart Brick System.

EXAMPLE: to put Smart Brick Brain 00 into **ECHO MODE**:

g00

EXAMPLE: a '**START TRACK#** 00' command will echo:

t00

"h" Exit Echo Mode:

This command takes all Smart Brick Brains in the system out of **ECHO MODE**.

EXAMPLE: to take any and all Smart Brick Brains out of **ECHO MODE**:

h

"i" (track#) Track Status Mode:

This command responds with a stream of ASCII HEX data containing the current status of the Smart Brick Brain specified by the **TRACK#**:

BYTE 1 & 2 = Smart Brick Brain STATUS
BIT 0 = STORED START RECEIVED
BIT 1 = CYCLING SHOWS FLAG
BIT 2 = DOING DELAY BETWEEN SHOWS
BIT 3 = DOING SHOW END
BIT 4 = LaserDisk (or DVD) CLOCKED SHOW
BIT 5 = EXTERNALLY CLOCKED SHOW
BIT 6 = Smpte CLOCKED SHOW
BIT 7 = INTERNALLY CLOCKED SHOW
BYTE 3= SPACE
BYTE 4 & 5 = INPUT STATUS
BIT 0 = GREEN INPUT STATUS (1 = closed)
BIT 1 = BLUE INPUT STATUS (1 = closed)
BIT 2 = PB INPUT STATUS (1 = closed)
BIT 3 = not used
BIT 4 = THUMBWHEEL SWITCH BIT 0
BIT 5 = THUMBWHEEL SWITCH BIT 1
BIT 6 = THUMBWHEEL SWITCH BIT 2
BIT 7 = THUMBWHEEL SWITCH BIT 3
BYTE 6 = SPACE
BYTE 7 & 8 = CURRENT, OR MOST RECENT SHOW NUMBER
BYTE 9 = SPACE
BYTES 10 through 13 = CURRENT BRICK ADDRESS

BYTE 14 = SPACE
BYTE 15 & 16 = DISPLAY HOURS
BYTE 17 = COLON
BYTE 18 & 19 = DISPLAY MINUTES
BYTE 20 = COLON
BYTE 21 & 22 = DISPLAY SECONDS
BYTE 23 = PERIOD
BYTE 24 & 25 = DISPLAY FRAMES
BYTE 26 = SPACE
BYTE 27 & 28 = DIPSWITCH 1
BYTE 29 = SPACE
BYTE 30 & 31 = J-6 PORT
BYTE 32 = CARRIAGE RETURN
BYTE 33 = LINE FEED

EXAMPLE: to poll the status for Smart Brick Brain 00:

i00 82 10 02 039D 02:00:05.08 30 00

This would tell you that the Smart Brick Brain is running an internally clocked show, that the system is currently cycling shows, that the thumbwheel switch is set to '1', the show number is '02', the frame being addressed in the Smart Bricks is 039D, the time into the show is 5.08 seconds, that record is enabled and we are using 64K Smart Bricks, and that there is no input to the J-6 port.

"k" (track#) Smart Brick Brain Status:

This command responds with the following information for the Smart Brick Brain specified by the **TRACK#**:

BIT 0 = STORED START RECEIVED
BIT 1 = CYCLING SHOWS FLAG
BIT 2 = DOING DELAY BETWEEN SHOWS
BIT 3 = DOING SHOW END
BIT 4 = LaserDisk (or DVD) CLOCKED SHOW
BIT 5 = EXTERNALLY CLOCKED SHOW
BIT 6 = Smpte CLOCKED SHOW
BIT 7 = INTERNALLY CLOCKED SHOW

EXAMPLE: to poll the status of the Smart Brick Brain addressed at 00:

k0040

This would tell you that the Smart Brick Brain is currently running a Smpte clocked show.

"I" (track#) Switch Status:

This command responds with the following information for the Smart Brick Brain specified by the **TRACK#**:

BIT 0 = GREEN INPUT STATUS (1 = closed)
BIT 1 = BLUE INPUT STATUS (1 = closed)
BIT 2 = PB INPUT STATUS (1 = closed)
BIT 3 = not used
BIT 4 = THUMBWHEEL SWITCH BIT 0
BIT 5 = THUMBWHEEL SWITCH BIT 1
BIT 6 = THUMBWHEEL SWITCH BIT 2
BIT 7 = THUMBWHEEL SWITCH BIT 3

EXAMPLE: to poll the input switch status for Smart Brick Brain 00:

I0031

This would tell you that the Smart Brick Brain has the thumbwheel switch set to '3', and that their is an input present on the GREEN input.

"m" (5AA5) (track#) Enter Setup Mode:

This command puts the Smart Brick Brain specified by the **TRACK#** into the configuration mode. All other Smart Brick Brains in the system are locked off from receiving any serial commands when there is even one Smart Brick Brain in configuration mode. They will not accept any serial commands until they hear the commands to exit configuration mode being sent to the one Smart Brick Brain which is in this mode. For details on the configuration mode, see the configuration section of this manual.

EXAMPLE: to put Smart Brick Brain 00 into setup mode:

m5AA500

If the Smart Brick Brain is locked, then it will ask for a password before allowing you to enter configuration mode. If the password clears the lock, and there are no other locks set, then you will enter configuration after you then hit 'any' key.

"n" (track#) Memory Address Status:

This command responds with the address being sent to the Smart Bricks by the Smart Brick Brain specified by the **TRACK#**. By polling this value, you can monitor the progress of any show.

EXAMPLE: to poll the memory address status for Smart Brick Brain 00:

n00*0000*

"q" (track#) J-6 Port Status:

This command responds with the current status of the J-6 PORT for the Smart Brick Brain specified by the **TRACK#**.

EXAMPLE: to poll the J-6 PORT status for Smart Brick Brain 00:

q00*00*

"r" (track#) Download Configuration:

This command responds with the current contents of the configuration EEprom for the Smart Brick Brain specified by the **TRACK#**. This string of 89,903 ASCII characters (65,315 for older Smart Brick Brains) is led off by the character string 's 5AA5'. As it happens, this is the lead in string for the **LOAD CONFIGURATION** command. This allows you to save the configuration of one or more Smart Brick Brains (or other Smart Bricks and Digital Audio

Repeaters) in your computer for later retrieval or archiving, and then simply and easily reload this data at any time. To save the data to the disk of your computer:

1) Turn off all echo modes.
2) Tell your computer to save all ASCII text received from the serial port.
3) Give this command to any Smart Brick Brain (or other serial device) in the system.
4) When the download is finished, tell your computer to 'stop' saving ASCII text.

Step #3 above can be repeated for any number of Smart Brick Brains (or other Smart Bricks and Digital Audio Repeaters) in the system. This stored file can then be played back to the Smart Brick System where it will be reloaded into the configuration EEproms of all the appropriate Smart Brick Brains and other devices.

The data returned by this command is as follows:

BYTE 1 = 's'
BYTE 2 = '5'
BYTE 3 = 'A'
BYTE 4 = 'A'
BYTE 5 = '5'
BYTES 6 & 7 = TRACK# (00 to FFH) This is the address of the Smart Brick Brain which is accepting the command.
BYTES 8 through 89,901 = ASCII HEX DATA DUMP FROM CONFIGURATION EEprom
BYTE 89,902 = CARRIAGE RETURN
BYTE 89,903 = LINE FEED

EXAMPLE: to poll the configuration for Smart Brick Brain 00:

r00

s5AA50000.....

"s" (5AA5) (track#) (string) Upload Configuration:

This command loads the string which follows it into the configuration EEprom for the Smart Brick Brain specified by the **TRACK#**. This command is used to load the configuration from another source into one or more Smart Brick Brains in the Smart Brick System. Since the **Download Configuration** command leads off its string with a 's 5AA5', data saved in the **Download Configuration** command can be reloaded into the audio system by simply sending back to the Smart Brick System. You have set your computer to use ACK/NAK handshaking and it must be fast enough to respond to this type of handshaking. If this is not possible, or if you are having trouble getting good uploads, you can set a 'delay between each character' in your modem program. This will slow the transmission down enough that the ACK/NAK handshaking is no longer needed.

To Upload a Previously saved configuration:

1) Tell your computer to send out the previously saved output string from the **Download Configuration** command.

The Rack Brain will report on the success or failure of the configuration upload on the LCD display (if installed) and on the screen of the computer. The standard Smart Brick Brain (and earlier revisions of the Rack Brain) will only report if Interactive mode has been turned on prior to issuing this command.

Start Commands

"t" (track#) Start Track:
"u" Start Global:
"v" Start Cocked:

"w" (group) Start Group:

These commands start the animation playing on the Smart Brick Brain(s) addressed by the command. The shows will always start from the beginning of the show being played. If an addressed Smart Brick Brain is cycling shows, it will have its cycling mode reset. If the Smart Brick Brain is already playing, it can be configured to do one of the following things:

1) IGNORE THIS EARLY START.
2) SAVE THE START UNTIL THE CURRENT SHOW FINISHES AND THEN DO IT.
3) JUMP TO THE START OF THE NEXT SHOW.
4) JUMP TO THE START OF THE CURRENT SHOW.

If the Smart Brick Brain receives a start command after it has received a request for a specific show, it will play that show. Requests for specific shows can come from the serial port, J-6 PORT, and the jump forward and jump back internal show requests (lowest priority).

Stop Commands

"x" (track#) Stop Track:
"y" Stop Global:
"z" Stop Cocked:
"G" (group) Stop Group:

These commands stop the selected Smart Brick Brain(s) unconditionally. The stop takes place at the current frame being played.

Reset Commands

"H" (track#) Reset Track:
"I" Reset Global:
"J" Reset Cocked:
"K" (group) Reset Group:

These commands reset the shows being played to

their first frames on all addressed Smart Brick Brain(s). This command is only valid for INTERNALLY and EXTERNALLY clocked shows, since both LaserDisk (or DVD) and Smpte clocked shows are at the mercy of time code they are receiving. If the Smart Brick Brain(s) are in the delay mode when the **RESET** is received (no matter the time code being used), then the Brain(s) will check their thumbwheel switches and reinitialize their countdown clocks upon receiving this command.

"X" (track#) Cock Track:

This command sets the cocked flag on the Smart Brick Brain specified by the **TRACK#**. Any Smart Brick Brain which has been 'cocked' will respond to whatever the next 'cocked' commands that is received. This flag will be reset upon the receipt of any '**COCKED**' command, or by using one of the two following **RESET COCKED** commands.

EXAMPLE: to cock Smart Brick Brain 00:

X00

"Y" (track#) Un-Cock Track:

This command resets the cocked flag on the Smart Brick Brain addressed by the **TRACK#**. After this flag is reset, the addressed Smart Brick Brain will no longer respond to **COCKED** commands.

EXAMPLE: to un-cock Smart Brick Brain 00:

Y00

"Z" Un-Cock Global:

This command resets the cocked flag on all the Smart Brick Brains in the system. After the cocked flags are reset, no Smart Brick Brains in the system will respond to any **COCKED** commands.

EXAMPLE: to un-cock all Smart Brick Brain in the system:

Z

Loop Commands:

"!" (track#)	**Loop Track:**
""	**Loop Global:**
"#"	**Loop Cocked:**
"$" (group)	**Loop Group:**

These command acts much like a **START** commands, except that they also set the '**LOOPING SHOWS**' flag. With the this flag set, it is possible to set a sequence of shows playing in any order. The shows can be played with no delay or with a preset delay between each. Since the 'next' show can be any show you ask for, one show can be played over and over again, or you can set up a sequence of shows which will be repeated until the Smart Brick Brain is told to stop.

When the '**LOOPING SHOWS**' flag set, the Smart Brick Brain will check to see if the '**IMMEDIATE CHAIN**' or 'DELAY' flags are set when it has finished playing a show. If the show has a the '**IMMEDIATE CHAIN**' flag set, then it will immediately start playing the 'next' show, which you can set to be any show in the system. If the '**DELAY**' flag is set, then the Smart Brick Brain will check to see if the thumbwheel switch on its front is set to anything other than 0. If it is, then it will then start this new delay countdown. At the end of the countdown, whatever 'Countdown end' actions are set will take place just as though a switch closure input had just happened. In most cases this will be another **LOOP** command, which will then start the next show. At the end of that show, the whole process will then start over.

Stop at End Commands

"%" (track#) Stop at End Track:
"&" Stop at End Global:
"" Stop at End Cocked:
"(" (group) Stop at End Group:

These commands reset the cycling mode in the selected Smart Brick Brain(s) . What this dies is to stop them playing when the end of their current shows are reached. The **STOP** commands are used when you want to stop a show immediately. These commands are used when you want the shows to finish gracefully.

If the '**ALLOW CHAINS**' option has been selected on a Smart Brick Brain, then any immediate jumps to whatever the next show is will take place even after the cycling mode has been stopped by using these commands

Select Show Commands

")" (track#) (show#) Select Show Track:
"*" (show#) Select Show Global:
"+" (show#) Select Show Cocked:
"/" (group) Select Show:

Up to two hundred fifty-five different animated shows can be stored on a single Smart Brick System. These commands can be used to select an individual show on the selected Smart Brick Brain(s). Individual shows can be requested with SHOW# requests with a range of 01 to 3Fh (01 to FFH with a Rack Smart Brick Brain). Once a show is selected, it will be played on the next start (the start can come from a serial port command, a hardware input command, or at the end of the normal countdown between shows if the Smart Brick Brain is cycling. When it has finished playing the requested show (or sequence of shows), you have the option of letting the Smart Brick Brain return to what would have been the

next show had there not been a special request made.

If a show selection has been made inadvertently, it can be cleared by sending a request for SHOW# 00 at any time before it begins playing. Show requests from the serial port have the highest priority in the Smart Brick System.

"=" (track#) (address) Set Brick Address:

The address being sent to the Smart Bricks from a Smart Brick Brain can be altered by using this command. This can be used to send a specific address to all of the Smart Bricks to set all of the outputs to the values stored at this address, or to alter the address counters of an internally or externally clocked animated show while it is running. Using this command on LaserDisk (or DVD) or Smpte clocked shows while they are running will have minimal effect, as the address will go back to what it should have been as soon as the next frame of time code is received.

EXAMPLE: to set all of the Smart Bricks on Smart Brick Brain 00 to address 1234:=

=001234

"`" Advance One Frame:
"~" ~~Go Back One Frame:~~

These commands are uses as a test feature or to do a little single step programming. The first will advance the frame counters by one frame, while the second will subtract one frame from the current frame count. Be aware that the minutes, seconds and frame counters may not be incremented properly, and definitely won't be decremented at all. A Smart Brick will only accept and remember data while stepping forward into a new frame.

Summary of Serial Commands

"a" (track#)	**Enter Interactive Mode:**
"b"	**Exit Interactive Mode:**
"c" (track#)	**Enter Global Echo Mode:**
"d"	**Exit Global Echo Mode:**
"e" (track#)	**Enter Echo All Mode:**
"f"	**Exit Echo All Mode:**
"g"	**Enter Echo Mode:**
"h"	**Exit Echo Mode:**
"i" (track#)	**Track Status Report:**
"k" (track#)	**Smart Brick Brain Status:**
"l" (track#)	**Switch Status:**
"m" (5AA5) (track#)	**Enter Setup Mode:**
"n" (track#)	**Memory Address Status:**
"q" (track#)	**J-6 Port Status:**
"r" (track#)	**Download Configuration:**
"s" (5AA5) (track#) (string)	**Upload Configuration:**
"t" (track#)	**Start Track:**
"u"	**Start Global:**
"v"	**Start Cocked:**
"x" (track#)	**Stop Track:**
"y"	**Stop Global:**
"z"	**Stop Cocked:**
"H" (track#)	**Reset Track:**

"I"	**Reset Global:**
"J"	**Reset Cocked:**
"X" (track#)	**Cock Track:**
"Y" (track#)	**Un-Cock Track:**
"Z"	**Un-Cock Global:**
"!" (track#)	**Cycle Track:**
**""" **	**Cycle Global:**
"#"	**Cycle Cocked:**
"%" (track#)	**Stop at End Track:**
"&"	**Stop at End Global:**
**""" **	**Stop at End Cocked:**
")" (track#) (show#)	**Select Show Track:**
"*" (show#)	**Select Show Global:**
"+" (show#)	**Select Show Cocked:**

"=" (track#) (address) Set Brick Address:

"`"	**Advance One Frame:**
"~"	**Go Back One Frame:**

This page isn't blank either

- Rack Smart Brick Brain -

The Rack Mounted Smart Brick Brain is an extended version of the standard Smart Brick Brain. Features it adds to the standard Smart Brick Brain are:

- Plugs into standard Brick Card Cages
- It can control up to two hundred fifty-five different shows
- Supports Smart Bricks with up to 1,048,576 bytes of storage
- It can sequentially control up to seven LaserDisk (or DVD) Players
- Can be used with CLV (long play) as well as CAV LaserDisks
- Real Time Clock that can be used to schedule when shows play for up to a year in advance.
- Optional two line LCD display on its front can display the system and show status
- It can do a countdown between shows while running another show in the background

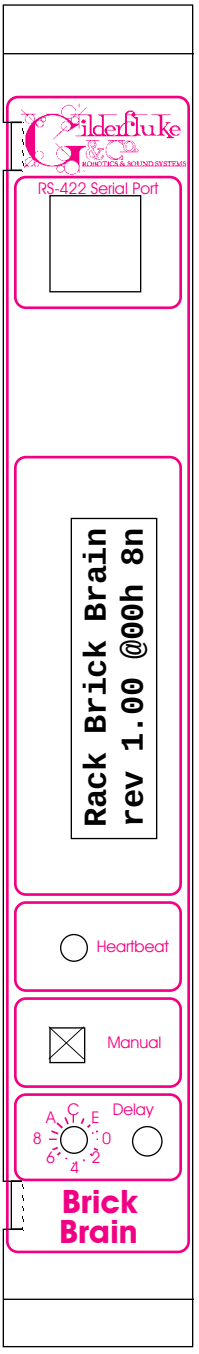

- Rack Smart Brick Brain Connections -

The only connection on the front is the the RS-422 serial port, which is also wired to the backplane. This serial port is used to send commands to the Smart Brick System or to connect LaserDisk (or DVD) players to the Rack Smart Brick Brain. It must be connected to a terminal or computer running a modem or terminal emulation program for configuring the Rack Smart Brick Brain. This is the same style of connector and pin out as is used on the AB-100 Digital Audio Repeaters, and can be attached to both Smart Brick Brains and Digital Audio Repeaters simultaneously, just so long as their addresses don't conflict. Facing the end of the cable with the release latch upwards, its pin out is as follows:

	pin #	COLOR	SIGNAL NAME:
(left)	1	WHITE	signal ground
	2	BLACK	- Tx data out from Smart Brick Brains
	3	RED	+ Tx data out from Smart Brick Brains
	4	GREEN	- Rx data in to Smart Brick Brains
	5	YELLOW	+ Rx data in to Smart Brick Brains
(right)	6	BLUE	signal ground

To cross wire the RS-422 / RS-485 signals from the Rack Smart Brick Brain to the RS-232 serial port of an IBM compatible or Pioneer LaserDisk (or DVD) player, cross connect the signals as follows:

IBM	IBMPioneer LaserDisk (or DVD)			
DB-25	DE-9	DB-15	SIGNAL	SIGNAL FROM/TO Smart Brick Brain
2	3	2	DATA OUT	- Rx data in to Brick Brain (GREEN)
3	2	3	DATA IN	- Tx data out from Brick Brain (BLACK)
7	5	1, 11 or 15	GROUND	signal ground (BLUE or WHITE)

Apple Macintosh computers have true RS-422 serial ports built in. To connect to the Smart Brick System, the pin out is as follows for a Macintosh mini-DIN-8:

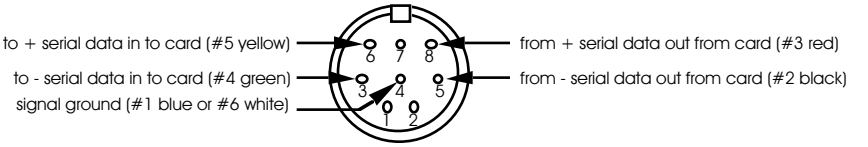

The Rack Smart Brick Brain can sequentially control up to seven LaserDisk (or DVD) Players using the LaserDisk multiplexer (BS-LDMUX15 for Pioneer/Panasonic players or BS-LDMUX25 for Sony). This attaches to the Rack Smart Brick Brain through its relay outputs and RS-422 serial port as shown in the following drawing. The BS-LDMUX also converts the RS-422 ports on the Rack Smart Brick Brain to the RS-232 needed by the LaserDisk (or DVD) players. Indicator LEDs show serial data being sent to and received from the different LaserDisks (or DVD)s. The serial ports on the LaserDisk Multiplexer are at RS-232 levels. Standard fifteen (Pioneer or Panasonic) or twenty-five pin (Sony) cables can be used to attach the LaserDisks to it. A small twelve VAC power supply runs the LaserDisk Multiplexer. The Rack Smart Brick Brain's relay outputs can not be used for any other purpose when running multiple LaserDisk (or DVD) players.

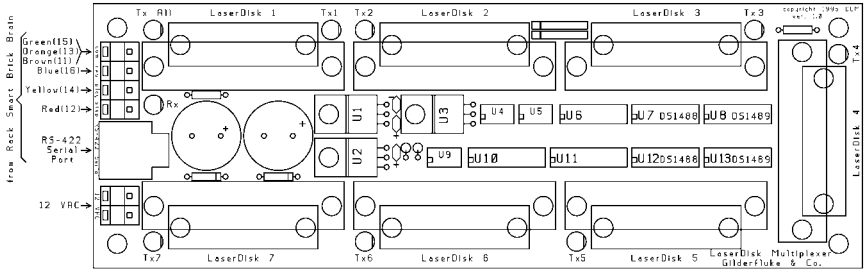

The majority of Backplane Connections are typically made through the 40 pin IDS connector on a Brick card cage:

output wire #	Edge pin #	color	wire function
Smart Brick net #2	1	black	- Smart Brick Network Data from Brick Brain
Smart Brick net #1	2	white	+ Smart Brick Network Data from Brick Brain
Smart Brick net #3	3	red	+ Smart Brick Network Clock from Brain
Serial Port #3	4	red	TxD + out from Smart Brick Brain
Smart Brick net #4	5	green	- Smart Brick Network Clock from Brick Brain
Serial Port #2	6	black	TxD - out from Smart Brick Brain
Smart Brick net #5	7	yellow	+ Smart Brick Network Strobe from Brick Brain
Serial Port #5	8	yellow	Rx + in to Smart Brick Brain
Smart Brick net #6	9	blue	- Smart Brick Network Strobe from Brick Brain
Serial Port #4	10	green	Rx -in to Smart Brick Brain
#1	11	brown	1/4 J6 in Ground
#2	12	red	1/4 J6 in bit 7

#3	13	orange	1/4 J6 in bit 6
#4	14	yellow	1/4 J6 in bit 5
#5	15	green	1/4 J6 in bit 4
#6	16	blue	1/4 J6 in bit 3
#7	17	violet	1/4 J6 in bit 2
#8	18	gray	1/4 J6 in bit 1
#9	19	white	1/4 J6 in bit 0
#10	20	black	1/4 J6 in + Supply
#11	21	brown	Stop Relay contact closure
#12	22	red	Stop Relay contact closure
#13	23	orange	Play Relay contact closure
#14	24	yellow	Play Relay contact closure
#15	25	green	Rewind Relay contact closure
#16	26	blue	Rewind Relay contact closure
#17	27	violet	Green Input negative
#18	28	gray	Green Input Positive
#19	29	white	Blue Input negative
#20	30	black	Blue Input Positive
#21	31	brown	Smpte ground
#22	32	red	Smpte Input
#23	33	orange	not used
#24	34	yellow	not used
#25	35	green	not used
#26	36	blue	not used
#27	37	violet	not used
#28	38	gray	not used
#29	39	white	not used
#30	40	black	not used
#31	41	brown	not used
#32	42	red	not used
#33	43	orange	not used
#34	44	yellow	not used
#35	45	green	not used
#36	46	blue	not used
#37	47	violet	not used
#38	48	gray	not used
#39	49	white	not used
#40	50	black	not used
n/a	51	black	power supply ground
n/a	52	black	power supply ground
n/a	53	black	power supply ground
n/a	54	black	power supply ground
n/a	55	black	power supply ground
n/a	56	red	+ power supply input
n/a	57	red	+ power supply input
n/a	58	red	+ power supply input
n/a	59	red	+ power supply input
n/a	60	red	+ power supply input

Pins 11 through 50 (second column in the above chart) are attached to pins 1 through 40 (first column) of the 40 pin IDS connector. The first and last ten pins are bussed to all of the cards in the card cage.

The 1/4 J6 Input is optically isolated. It can be set to run from an external power source (default configuration) or the same power as the Rack Smart Brick Brain. This is selected by moving the two jumpers on JP-2 as shown on the board. Both jumpers to the left set the 1/4 J6 to internal power. Both jumpers to the right set the 1/4 J6 to external power.

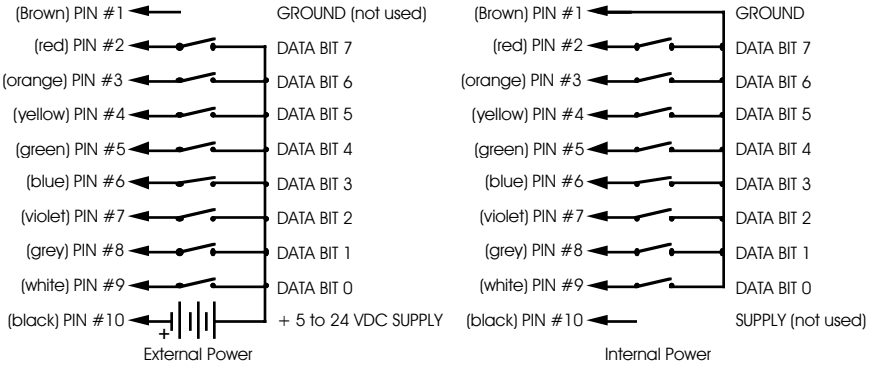

The Connections to the J-8 input are as follows. These inputs are optoisolated. You must provide a voltage to them:

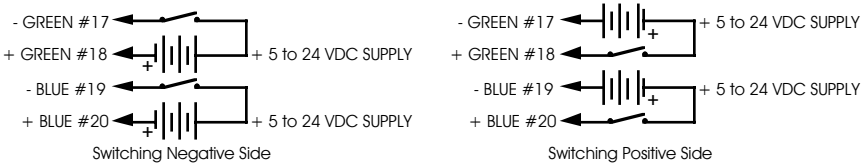

The J8 input has the same functionality as the J-8 connections found on all of our normal Micro MACs Bricks. Facing the end of the RJ-11 plug with the latch upward, the order of these inputs is as follows:

	COLOR	**SIGNAL NAME:**
1)	WHITE:	not used
2)	BLACK:	common + 5 to 24 VDC (15 Volts nominal) input
3)	RED:	not used
4)	GREEN:	optically isolated input
5)	YELLOW:	not used
6)	BLUE:	optically isolated input

- Rack Smart Brick Brain Messages -

The optional LCD display displays a variety of messages about the current state of the Rack Smart Brick Brain. When it first boots it displays:

```
Rack Brick Brain
rev 1.00 @00h 8n
```

This shows the revision number of the firmware, the card is addressed at 00h, the baud rate is set to 9600 (that is what the code number '8' means), and that no parity is enabled (that is the 'n').

The lower line of the display normally will show the current time as long as there is no show running, and the show time and frame number if a show is running. A variety of other messages will be displayed by the top line of the display. Some of these will flash by too fast to ever be read.

"start string", "end string", "MultiDisk string" :

Sending a start, end, or MultiDisk string. The number of the string, the byte within that string, and the response to it will be displayed exactly as on a Heads Up Display.

"waiting for PB", "waiting for blue", "wait for green "

These are displayed if a code was found in the start or end string that causes the Smart Brick Brain to wait for a closure on any of these inputs.

"at end of show":

Normal end of show has been found.

"invalid FPS":

The Frame Rate has been set to a value which won't work with the type of time code selected.

"int clocked show", "extern. clk show", "Smpte clock

show", "LaserDisk show":

The shows are actually running.

" starting Smpte ":

A Smpte clocked show is being started, but the Rack Smart Brick Brain has yet to receive any time code.

"invalid timecode":

This is displayed if the Smpte hour received doesn't point to a show that has been configured to run from Smpte timecode.

"in configuration", "exited config.":

These are displayed as you enter and exit the configuration mode.

"+single stepping", "-single stepping":

Displayed in response to the single step serial port commands.

"countdown hold":

This is displayed when the countdown has been stopped by an external input.

"countdown done":

Displayed at the end of a normal countdown. About the only time you will actually see this is if you don't have anything configured to happen at the end of a countdown, or the countdown has been set to zero length during it.

"countdown delay0":

The number of the countdown display is displayed during normal countdowns.

"delay 0/play FFh":

This is displayed while running a background show while also doing a countdown delay. The number of the display, as well as the HEX number of the show are also displayed.

"bridging dropout":

This is displayed while the Rack Smart Brick Brain is bridging over a gap in the incoming Smpte or LaserDisk (or DVD) timecode.

"startup lockout":

This is displayed and most of the functions of the Rack Smart Brick Brain are disabled when the defaults have been forced to reload by pressing the 'manual' button as the Brain is powered up. It can only be cleared by entering and exiting setup mode.

"DeadBeef error":

This is displayed and most of the functions of the Rack Smart Brick Brain are disabled when the Smart Brick Brain senses a major error in its configuration.

"response error":

If a start or end string has within it a request for a specific character, but another character is received, this message will be displayed.

"PioneerStart err", "Sony start error":

These will be displayed if there is an error encountered when trying to start a LaserDisk (or DVD) show. What this typically means is that the LaserDisk (or DVD) player needs to be spun up.

"spinup Pioneer", "Sony disk spinup":

These are displayed while spinning up the LaserDisk

(or DVD) player.

"LaserLoop Error":

Displayed if an error is encountered during a LaserDisk (or DVD) show.

"LaserDisk early":

This is displayed if we find ourselves before the start of the show on the LaserDisk (or DVD).

"frame reset cmnd":

Displayed in response to this command.

"call vendor":

Displayed if error occurs that requires service from the vendor who installed your system.

"no LD in config.":

Displayed if a LaserDisk (or DVD)-based show is attempted to be played while the Rack Smart Brick Brain is in Setup mode. As the serial port is being used for the terminal during Setup, it is impossible to play a LaserDisk (or DVD)-based show during Setup.

"stop at end cmnd":

Displayed in response to this command.

"stop command":

Displayed in response to this command.

- Rack Smart Brick Brain Configuration -

To configure the system you first need to connect the system just as you do for any serial communications (see the 'Smart Brick System Commands' section of the manual). The configuration mode is entered by the command:

"m" (5AA5) (track#)

Typically, the Smart Brick Brain is configured to respond when addressed as track '00', and so the string you send the Smart Brick Brain is 'm5AA500'. The '5AA5' part of the string acts like a combination lock to keep random noise on the serial input lines from accidentally entering the configuration mode.

This command brings up the following menu from the Smart Brick Brain which was addressed. (In this case this shows the configuration after the defaults are reloaded.)

```
- Gilderfluke & Co. Rack Smart Brick Brain - rev. 2.00 copyright 1991-2000 DCM -

a) brain address- __0    | i) InfraRed mode- no     | u) on startup- wait
b) baud rate- 9600 baud  | j) coin op mode- no      |  #255: 'Background_Show_'
c) LD Serial- 9600 baud  | k) select from J6- no    | v) immed. jumps- loop only
d) VT-52 mode- yes       | l) direct select- xxx    | w) countdown hold- no
e) numbers- Decimal      | n) debounce- __8         | y) player type- Pioneer
f) show storage 1 deep   | p) running delay- __8    | z) LaserDisk time- no
g) respond to group- 0   | q) tape deck pulse- __8  | +) dropout protection- yes
h) set clock             | t) error count- __8      | =) print show counters
                            PAUSE  CONT.                        STOP
   INPUT and EDGE           [rtz]  [inc]  START  LOOP   STOP  at END TAPE DECK
 1) green input Closing:  |______|______|______|______|______|______|___stop__|
 2) green input Opening:  |______|______|______|______|______|______|_________|
 3) blue input Closing:   |______|______|______|______|______|______|___play__|
 4) blue input Opening:   |______|______|______|______|______|______|_________|
 5) PB input Closing:     |______|______|______|__on__|______|______|___rew.__|
 6) PB input Opening:     |______|______|______|______|______|______|_________|
 7) J6 input Closing:     |______|______|______|__on__|______|______|_________|
 8) J6 input Opening:     |______|______|______|______|______|______|_________|
 9) countdown end:        | randomly start (loop) shows __5 thru 117
     m) more...    o) load defaults    r) download configuration    x) eXit

         DST 01:10:19 Saturday October 16, '00     enter command-
```

If the key and **TRACK#** match, the card addressed by the

TRACK# will put a configuration menu on the screen. When this mode is entered by any Smart Brick Brain or Digital Audio Repeater card on the same serial network, it disables all of the other serial commands on all the other cards in the system.

If at any point you enter a command and have yet to enter any other characters, you can leave the command by hitting the <ESC>ape or <RETURN> key. If you have already entered some characters, the <ESC>ape key can be used to erase all of the characters you have entered so far. The <DELETE> key can be used to erase just the last character entered. If you try to enter more characters than the command calls for, the extra keystrokes will 'roll' any additional input. Hitting the <RETURN> key will tell the Rack Smart Brick Brain to accept your entry as typed. If the entry is invalid, the Rack Smart Brick Brain will beep annoyingly and ask for the same input again.

The <ESC>ape key or <SPACE BAR> can be used to redraw the screen at any time. If you want to keep a hard copy printout of the current configuration of any screen, you should hit either of these keys while saving the text on your computer. This file can then be printed out at any time.

If you ever need to set the Smart Brick Brain back to its default settings (9600 baud, address 00H, and no parity), you can do so by powering down the card, and then holding the 'MANUAL' button as you power it back up. The default serial port configuration settings will be reloaded and the Rack Smart Brick Brain will wait for you to enter configuration and exit again before normal operation is restored. No other configuration settings will be affected.

All of the 'show specific' configuration settings can be downloaded from the PC·MACs to the Smart Brick Brain. These are all of the settings that are normally set in the 'Show Setup' menu. No other settings in the Smart Brick Brain will be affected.

Unless the second serial port is being used, entering entering

configuration will stop any LaserDisk (or DVD) clocked show which is currently running, and keep any new ones from being started.

The configuration of the Rack Smart Brick Brain can be locked at any time by simply moving the 'write protect' switch to the 'protected' position. The menu will warn you that changes will have no affect when the EEprom memory is protected.

"a" Enter Track Number:

This command is used to tell the Smart Brick Brain which addresses it should respond to from the serial commands. No two Smart Brick Brains, Smart Bricks or Digital Audio Repeater Cards on the same serial network can have the same address assigned to them. When loaded with the default configuration, the address assigned to a card is 00. If more than one Smart Brick Brain, Smart Brick or Digital Audio Repeater card is used in the system, they should be plugged in one at a time to have their addresses changed. Once changed, each card can stay on line.

The Rack Smart Brick Brain will show the current address, baud rate and parity on its display when it first boots up. 9600 Baud (the default) displays as a number '8', for consistency with earlier Smart Brick Brains.

"b" Baud Rate:

All cards in the system must be set to the same baud rate. The default speed is 9600 baud. This command doesn't take effect until you enter the eXit command. The serial port on each Smart Brick Brain can support any of the following baud rates:

1) 300
2) 600
3) 1200
4) 2400

5) 4800
6) 9600 (default value)
7) 19,200 (not exact)

The Rack Smart Brick Brain will show the current address, baud rate and parity on its display when it first boots up. 9600 Baud (the default) displays as a number '8', for consistency with earlier Smart Brick Brains.

"c" LD Serial Port:

2.00 and later Smart Brick Brains are equipped with a second serial port. This can be used for route all of the strings and other LaserDisk and DVD commands, instead of using the main serial port. Either 4800 or 9600 baud can be used for this serial port.

"d" VT-52 Mode:

When this toggle is enabled, the Rack Smart Brick Brain will use special escape sequences to clear the current line (<ESC>ape 'l'), or position the cursor (<ESC>ape 'Y' ROW COLUMN). When disabled, the Analog Smart Brick has to redraw the entire screen to change any value, so it can save a good deal of screen redraw time if you have a compatible display.

"e" Numbers:

This toggles the Rack Smart Brick Brain between Decimal and Hexadecimal numbering systems.

"f" Show Storage:

This toggles the Rack Smart Brick Brain between storing just a single, or up to 255 early show starts and requests. Early how starts are those which arrive while another show is playing. You can set each show individually to 'store', ignore, or act immediately upon early starts.

Single storage depth is typically used in installations where the guest swill be making show requests. An example of this is in a museum display. If a show is already running, you don't want it to be stepped upon. Neither do you want it to store all of the start button requests that arrive while it is playing.

255 deep storage is used where you will be stacking up an entire sequence of shows to play, and then starting them rolling in turn. An example of this is where a show which is made up of a number of shorter shows is stacked up, and then started as though it were a single show.

"g" Respond to Group:

Any Smart Brick Brain or Digital Audio Repeater can be configured to respond to one of sixteen possible 'group' commands issued through the serial port. This allows you to start several devices with only a single command. This menu selection is used to set which group this card will respond to. The allowable range for this entry is 09, A-F.

"h" Set Clock:

This command is used to set the real time clock on the Rack Smart Brick Brain. If you select 'Automatic Daylight Savings Time', then the clock will automatically 'Spring forward' on the first Sunday in April (at 2:00 AM) and 'Fall back' on the last Sunday in October (again at 2:00 AM). If automatic Daylight Savings Time is enabled, the time will be preceded by 'DST' during the summer months.

"i" InfraRed Mode:

This toggle turns on a special serial port mode on the Rack Smart Brick Brain which allows it to be used with the

InfraRed Transmitter and Receiver. The IR Remote is typically used to trigger an animation or sound system mounted on a vehicle, turntable, or other installation where wires can't be used. All serial port commands except for 'm' (enter setup mode) are disabled when this toggle is ON.

The connections to the IR Remote Receiver are as follows (view is facing end of cable with latch up):

	NAME	COLOR	SIGNAL FUNCTION
LEFT	GROUND	WHITE	SIGNAL GROUND
	n/c	BLACK	no connection
	n/c	RED	no connection
	- TxD	GREEN	- DATA IN to Rack Smart Brick Brain
	+ TxD	YELLOW	+ DATA IN to Rack Smart Brick Brain
RIGHT	GROUND	BLUE	SIGNAL GROUND

In addition to these connections, the IR Receiver requires a 7 to 24 volt DC power supply connection. This is normally attached to the two pads marked "+" and "-" on the receiver. A jumper option allows you to bring this in through the blue wire on the RJ-11 connector.

The IR Transmitter has an eight position dipswitch which sets which show it selects. The lower nibble of the address are set with the first four switches, and the upper nibble is set with the last four. Valid show numbers are 01h through FFh:

SWITCH #1	SWITCH #2	SWITCH #3	SWITCH #4	LOWER NIBBLE OF ADDRESS
OFF	OFF	OFF	OFF	x0h
ON	OFF	OFF	OFF	x1h
OFF	ON	OFF	OFF	x2h
ON	ON	OFF	OFF	x3h
OFF	OFF	ON	OFF	x4h
ON	OFF	ON	OFF	x5h
OFF	ON	ON	OFF	x6h
ON	ON	ON	OFF	x7h
OFF	OFF	OFF	ON	x8h
ON	OFF	OFF	ON	x9h
OFF	ON	OFF	ON	xAh
ON	ON	OFF	ON	xBh
OFF	OFF	ON	ON	xCh
ON	OFF	ON	ON	xDh
OFF	ON	ON	ON	xEh
ON	ON	ON	ON	xFh

SWITCH #5	SWITCH #6	SWITCH #7	SWITCH #8	UPPER NIBBLEOF ADDRESS
OFF	OFF	OFF	OFF	0xh
ON	OFF	OFF	OFF	1xh
OFF	ON	OFF	OFF	2xh
ON	ON	OFF	OFF	3xh
OFF	OFF	ON	OFF	4xh
ON	OFF	ON	OFF	5xh
OFF	ON	ON	OFF	6xh
ON	ON	ON	OFF	7xh
OFF	OFF	OFF	ON	8xh
ON	OFF	OFF	ON	9xh
OFF	ON	OFF	ON	Axh
ON	ON	OFF	ON	Bxh
OFF	OFF	ON	ON	Cxh
ON	OFF	ON	ON	Dxh
OFF	ON	ON	ON	Exh
ON	ON	ON	ON	Fxh

When in this mode you must also set the baud rate to 1200 baud and the '**EARLY STARTS**' should be set to 'IGNORE'. Any binary show number received by the serial port for more times than the value stored in the **DE-BOUNCE** variable will trigger that show. Typically the transmitters are placed along the path of the vehicle's travel to trigger the appropriate animation sequences at

the appropriate times.

"j" Coin-Op Mode:

This toggle turns on a special mode that is typically used with animation systems that are installed in coin operated devices. When this toggle is switched ON:

1) If no other show is playing and we aren't in a delay countdown, the Rack Smart Brick Brain will start playing show 255/FFh. This can be stopped if there is a closure on the BLUE input.

2) The end of the delay countdown will always call up show 255/FFh.

Show 255/FFh is then programmed as the 'attract' mode for the installation. Other shows are typically called up randomly or sequentially by the coin acceptor switch.

"k" Select from J6:

If more than one show is stored on a single Smart Brick System, each one can be accessed individually and played back. Up to two hundred fifty-five of these shows can be stored on a single Smart Brick System. These requests can be made through the serial port or through the 1/4 J6 Port.

This toggle enables the 1/4 J6 Port for requesting the shows on this Smart Brick System. There are two methods of selecting shows from this port. Which one is used is selected by the **DIRECT SELECT** command.

"l" Direct Select:

This command is used to switch the 1/4 J6 Port over to selecting one of eight shows directly, instead of using binary inputs for requesting up to two hundred fifty-five different shows. The **DIRECT SELECT** is useful when you have eight or less shows which need to be called up through

the 1/4 J6 Port. The 1/4 J6 Port can be wired directly to up to eight different pushbuttons. When any of these buttons are pressed it will select the appropriate show. The first button pushed will be played at the next START or **START LOOPING** command, unless it is overridden by another show request from the serial ports. (The Brain can also be told to start playing the newly requested show immediately if you tell the Smart Brick Brain to **START** or **START LOOPING** on the input to the 1/4 J-6 port.)

If this mode is off, then up to two hundred fifty-five different shows can be selected through the 1/4 J6 Port. The 1/4 J6 Port can be connected directly to the output of a computer or Animation Control System. If you need to connect it to pushbuttons, you will need to use diodes or a keyboard with an encoder (available from Gilderfluke & Company) to encode a binary number to be sent to the 1/4 J6 Port.

As with changes in inputs on the A, B, or PB input, changes on the 1/4 J6 Port can be used to **START**, stop, or whatever a Smart Brick Brain. If the **DIRECT SELECT** option is 'on', then a rising edge is on any new arrival of a new closure, and a falling edge is when all input lines are opened. If the **DIRECT SELECTION** is 'off', then a rising edge is on any change in the 1/4 J6 Port except for when all of the inputs go open, which is considered to be a falling edge.

"n" Debounce:

This command is used to set the number of times the software in the Smart Brick Brain will check the Blue, Green or 1/4 J6 inputs before actually believing them. Valid entries are from 0 to 255 (00H to FFH). A zero entry gives a two hundred fifty-six count loop for the longest possible response, 01 gives the fastest possible response. Too

small of an entry for the **DEBOUNCE** can cause problems with the inputs if they are noisy or tend to bounce. Too large a value will cause a delay before the Smart Brick Brain responds to these inputs. The default value is eight.

"p" Running Delay:

The running delay is the number of heartbeats after which the Smart Bricks stop advancing frames until it turns off the 'Advancing Frames' LED on the Heads Up Display and disables any Smart Brick outputs which have been configured to be 'disabled when stopped'.

"q" Tape Deck Pulse:

This command is used to set how long the pulse sent out through the 'stop', 'play', and 'rewind' relay outputs is. The length is the number of tenths of seconds the output will stay active after they are initially turned on. Valid entries are from 0 to 255 (00H to FFH). A value of 0 latches the outputs on permanently when they are set.

"t" Error Count:

In Smpte synchronized shows, the error count is the number of consecutive good frames of Smpte time code which must be received before the Smart Brick Brain believes what it is hearing. This is used to bridge over short dropouts or bad Smpte data received when the tape deck is just starting up.

In LaserDisk (or DVD) synchronized shows, the error count is the number of times the Smart Brick Brain will try to start a show by sending the LaserDisk (or DVD) player a 'search' string. It will display 'E6' error on the Heads Up Display during this period. If the LaserDisk (or DVD) player doesn't respond as expected for the 'error count' number of tries, then it will try to go into a 'startup' sequence

to try and spin up the LaserDisk (or DVD). The error message 'F2' will then be displayed as an attempt is being made to start up the LaserDisk (or DVD) player.

"u" On Startup:

You can tell the Smart Brick Brain to '**WAIT**', '**START**' or '**START LOOPING**' a specific show. If you set it to '**Wait**', the first frame of the selected show will be sent out from all of the Smart Bricks attached to this Smart Brick Brain. If you set it to '**START**', the Smart Brick System to play a single show and then stop and wait for the next command. '**START LOOPING**' is used if you want it to continue playing shows until it is told to stop.

Any show can be selected for the startup show. It's name is displayed on the next line below this command.

"v" Immediate Jumps:

This toggle is used if you want to let the Smart Brick Brain play consecutive shows which are tightly chained together (by having 'At end of show' set to '**IMMEDIATE**' in the shows' configuration), even when the **LOOPING MODE** is off. This should be set if you are building longer shows out of a number of shorter shows, and you don't want the Smart Brick Brain to stop right between any two segments if it receives a '**STOP AT END**' command.

The 'At end of show' 'Jump Immediately' setting can be used to build up longer shows from a number of shorter segments. You might want to do this if you are fixing a error in the show burnt onto a LaserDisk or DVD (skipping over a slow part of the show, for example), or to build up a show which runs continuously between the main shows, but has a number of 'seams' where it can branch to another show if one is specifically requested.

You can program the animation at these 'seams' so that there will be no jumps when the other shows start and end.

"w" Countdown Hold:

When this toggle is ON, then the delay between shows countdown can be temporarily stopped by applying a signal to the GREEN input.

"y" Player Type:

For those shows which are running from a LaserDisk or DVD, this command toggles the Smart Brick Brain between using the command format used by Pioneer, Sony or Panasonic LaserDisk Players. The only commands which are affected by this toggle are the 'SEARCH' and 'SPIN UP' commands which are sent to the players when a LaserSearch (01) is included in a start or end string, and the 'FRAME INQUIRY' commands sent to the player during a show. All of these happen transparently to the user once this toggle has been set.

"z" LaserDisk Time:

When this toggle is ON, LaserDisk or DVD clocked shows will display the actual frame being accessed on the LaserDisk or DVD instead of the show time. If a CAV disk is being used, then the frames will be in decimal numbers (00,001 to 54,000). If a CLV disk is being used, then the time will be displayed in a 'time' format. The show time is always displayed in a 'time' format.

"+" Dropout Protection:

When this toggle is ON, the Rack Smart Brick Brain will bridge over any gap in the Smpte or LaserDisk or DVD time code that lasts more than two frames. If the time code picks back up the Rack Smart Brick Brain will lock

back onto it.

"=" Print Show Counters:

This command is used to print a record of the number of times each show has played. This is stored in EEprom, and is retained even when the power is removed from the Smart Brick Brain. A grand total for the number of shows played on this Smart Brick Brain is also printed after all of the individual shows are displayed.

Show counters can be used to track the popularity of different shows, or to keep records for billing on shows where the client must pay a fee for each run. The latter is occasionally found on motion base attractions, where there is a copyright license on the film.

```
- Gilderfluke & Co. Rack Smart Brick Brain - rev. 2.00 copyright 1991-2000 DCM
-

Show __1: '***_Show__1_***': ____324 | Show __2: '***_Show__2_***': ____175
Show __3: '***_Show__3_***': _____0 | Show __4: '***_Show__4_***': _____2
Show __5: '***_Show__5_***': ___1154 | Show __6: '***_Show__6_***': ____125
Show __7: '***_Show__7_***': ____128 | Show __8: '***_Show__8_***': ____118
Show __9: '***_Show__9_***': _____98 | Show _10: '***_Show_10_***': ____122
Show _11: '***_Show_11_***': ____102 | Show _12: '***_Show_12_***': ____122
Show _13: '***_Show_13_***': _____89 | Show _14: '***_Show_14_***': _____92
Show _15: '***_Show_15_***': ____107 | Show _16: '***_Show_16_***': ____101
Show _17: '***_Show_17_***': ____104 | Show _18: '***_Show_18_***': ____102
Show _19: '***_Show_19_***': _____98 | Show _20: '***_Show_20_***': _____91
Show _21: '***_Show_21_***': ____101 | Show _22: '***_Show_22_***': ____101
Show _23: '***_Show_23_***': ____102 | Show _24: '***_Show_24_***': ____116
Show _25: '***_Show_25_***': ____107 | Show _26: '***_Show_26_***': ____122
Show _27: '***_Show_27_***': ____116 | Show _28: '***_Show_28_***': _____97
Show _29: '***_Show_29_***': ____102 | Show _30: '***_Show_30_***': ____110
Show _31: '***_Show_31_***': ____113 | Show _32: '***_Show_32_***': ____133
Show _33: '***_Show_33_***': ____115 | Show _34: '***_Show_34_***': ____110
Show _35: '***_Show_35_***': ____108 | Show _36: '***_Show_36_***': _____98
Show _37: '***_Show_37_***': _____82 | Show _38: '***_Show_38_***': ____100
Show _39: '***_Show_39_***': ____125 | Show _40: '***_Show_40_***': _____94

Press any key to continue.......
```

This command prints a single screen at one time. If you want to cancel before displaying the totals for all

255 possible shows, just hit the <ESC>ape key when it pauses between pages. You can store these counts for later printing or archive by telling your computer to save any incoming text to a file, and then invoking this command. After all of the screens have printed, tell your computer to stop saving text. This file that your computer creates can be later pasted into any word processor or other program. This is exactly how we make the illustrations in these manuals.

Input Triggering Commands:

"1" 'GREEN' Input Closing Edge:
"2" 'GREEN' Input Opening Edge:
"3" 'BLUE' Input Closing Edge:
"4" 'BLUE' Input Opening Edge:
"5" 'PB' Input Closing Edge:
"6" 'PB' Input Opening Edge:
"7" '1/4 J6 Port' Input Closing Edge:
"8" '1/4 J6 Port' Input Opening Edge:
"9" Countdown End:

Each Rack Smart Brick Brain has two opto-isolated external inputs, one push button input on the front, and one 1/4 J6 Port input (8 optoisolated inputs). Additionally, the Smart Brick Brain treats the end of a countdown just like it would treat any of the other inputs. These commands are used to select what actions will take place on each edge of each of these inputs. Note that both rising and falling edge actions are available to you. This allows you to to do things like start a show on a closing edge and then stop it on the opening edge of the same input. This would make it into a 'run while' input.

The closing edge on the 'GREEN', 'BLUE, and 'PB' inputs are considered to be when a normally open push button or switch is closed. The opening edge is when

that same switch or push button is opened. A closing edge on the 1/4 J6 Port is considered to be any of the eight inputs closing if the **DIRECT SELECT** option is 'on', or any change in the input (except going to all inputs open) if the **DIRECT SELECT** option is off. A opening edge on the 1/4 J6 Port is when all eight of the inputs go to an open condition.

The hardware for the 'GREEN', and 'BLUE', inputs need an external power source for the opto isolators to run. The 1/4 J-6 input can be jumpered on the Rack Smart Brick Card to use an external power supply or the internal power supply. Connections for these are shown elsewhere in this manual.

If you want the Smart Brick System to start playing shows as soon as it is powered up, you can set a '**START**' or '**START LOOPING**' command on the opening edge of any of the inputs. On power-up, the Smart Brick Brain will check all of the inputs and find that the one you are using has just opened. It will then act upon any commands you have set for this edge. This would normally be a '**START**' command if you only want the Smart Brick System to play a single show, or a '**START LOOPING**' command if you want it to continue playing shows until it is told to stop. We normally use the 'PB opening' edge to start shows on power-up (you can use any of the 'opening' edges) and then put in a '**STOP**' or '**STOP AT END**' command on the 'PB closing' command so that we can stop the shows once they have started.

If multiple inputs to the system arrive simultaneously, they have the following priorities:

1) '1/4 J6 Port" INPUTS
2) 'GREEN' input
3) 'BLUE' INPUT

4) 'PB' INPUT

This will probably happen only on power-up.

The commands have the following effects:

Pause/Return to Zero (RTZ):

a) **If running an Internally, Smpte or LaserDisk (or DVD) clocked show:** This command causes the currently running show to be paused at the current frame. If the show is LaserDisk (or DVD) clocked, the string 'E' will be sent when the show is paused. This string is typically configured to pause the LaserDisk (or DVD). A pause will be cleared if a new show is started, or the Continue command is used.

b) **If running an Externally clocked show:** When running an internally clocked show, this command causes the frame counters to be reset back to the start of the show. During countdowns, this command causes a new countdown delay to be started based on the current thumbwheel switch settings.

Continue/Increment:

a) **If running an Internally, Smpte or LaserDisk (or DVD) clocked show:** This command clears a pause in the currently running show which was set by the Pause command. If a show has been paused, then the show will continue from the current frame. If the show is LaserDisk (or DVD) clocked, then string 'F' will be sent when the show is continued. This string is typically configured to cause the LaserDisk (or DVD) to start playing from the current frame. If this command is issued and the show has not been paused, it will have no effect.

b) **If running an externally clocked show:** This com-

mand enables an input to advance frames on either the rising or falling (or both) edges of an input when running an externally clocked show.

Start:

This command causes the Smart Brick Brain to start playing the next show in line. At the end of the show, the Smart Brick Brain will stop unless the show which is played has the **IMMEDIATE CHAIN FLAG** set AND the **ALLOW CHAINS** flag is also on. Under those circumstances, it will continue to play shows until those conditions are not met.

If the '**LOOPING SHOWS**' flag is set, sending any type of '**START**' command to the Smart Brick Brain will reset this flag.

Loop:

This command acts much like a **START** command, except that it also sets the '**LOOPING SHOWS**' flag. With the this flag set, it is possible to set a sequence of shows playing in any order. The shows can be played with no delay or with a preset delay between each. Since the 'next' show can be any show you ask for, one show can be played over and over again, or you can set up a sequence of shows which will be repeated until the Smart Brick Brain is told to stop.

When the '**LOOPING SHOWS**' flag set, the Smart Brick Brain will check to see if the '**IMMEDIATE CHAIN**' or '**DELAY**' flags are set when it has finished playing a show. If the show has a the '**IMMEDIATE CHAIN**' flag set, then it will immediately start playing the 'next' show, which you can set to be any show in the system. If the '**DELAY**' flag is set, then the Smart

Brick Brain will check to see if the thumbwheel switch on its front is set to anything other than 0. If it is, then it will then start this new delay countdown. At the end of the countdown, whatever 'Countdown end' actions are set will take place just as though a switch closure input had just happened. In most cases this will be another **LOOP** command, which will then start the next show. At the end of that show, the whole process will then start over.

Stop:

This command will stop any show which is playing immediately and unconditionally.

Stop at End:

This command resets the '**LOOPING SHOWS**' flag. This means that the shows will stop playing at the normal end of show and won't start a new countdown under any circumstances, and won't chain unless the **ALLOW CHAINS** flag is set and there is a request for an **IMMEDIATE CHAIN** at the end of the current show.

Tape Deck:

These allow you to trigger the START, STOP or REWIND relay outputs from one of the external inputs or end of countdown.

Additional options are available for the Green or Blue closing edges, or the countdown end. For each of these, you can select the edge to trigger shows Sequentially, Randomly or Normally. You can also select these same options for each individual input in the 1/4 J6 input (eight inputs total) on the J6 configuration menu. If you select:

a) Sequentially: If you select this option, then you are

asked for the range of shows that you want to play. Each time this edge is triggered, then the next show in this range will be played. As an example of this, if you select a range of shows of ten to twenty: Show ten will be played on the first on the first edge, show eleven on the next, etc.. After show twenty plays, then the next show will be show ten again. Each time this window is displayed, the 'next' show which will be played on each input which has been set for sequential operation will be displayed.

If the range of shows is just one show, then the text displayed will show that only a single show will be requested and played on this input.

b) Randomly: If you select this option, then you are asked for the range of shows that you want to play on this input. Each time this edge is triggered, one of the shows within this range will be chosen at random and played. As an example of this, if you select a range of shows of ten to twenty: Show ?? will be played on the first on the first edge, show ?? on the next, etc.. The randomizer uses a separate counter for each of these inputs. This counts at ten Hertz from the first show selected through the last and then recycles. When the user selects an input which has been configured with this option, the Smart Brick Brain uses the current value of this counter to select and play a next show. If the randomizer played the same show the last time, it will spin the randomizer another time to try and select another show to play. If after this second spin, the same show comes up, then it will be played.

c) Normally: The inputs will behave as described above. You can select whether the input will pause,

continue, stop, stop at end, start, start looping, or trigger a tape deck output.

"m" More.....:

This command allows you to select from the other menus:

1) **Main Menu.** This brings you back to the main menu.
2) **Show Setup.** This will ask you which of the 255 possible shows you want to modify.
3) **String Setup.** This allows you to modify the strings used to control LaserDisk (or DVD)s.
4) **Delay.** This allows you to set how long each of the sixteen possible countdown delays are.
5) **Schedules.** This is where you modify the ninety different possible schedules.
6) **Calendar.** This is where you select which schedule will be used on any day.

"o" Load Defaults:

This command is used to reload the default conditions for the variables set on the main menu of the Rack Smart Brick Brain.

"r" Download Configuration:

This command is used to store the current configuration as a file on your computer. This file, once saved, can be restored to any 2.00 (or later) Smart Brick Brain by simply sending it back to the Brain. If the serial address of the saved file is different from the current address of the Smart Brick Brain, then you should only load it from within the Smart Brick Brain's configuration mode. Otherwise, the addresses will not match, and the Smart Brick Brain will ignore the file. (Before you exit configuration mode after doing an upload, check and correct the serial ad-

dress for this Smart Brick Brain on the 'Main' menu).

This command responds with the current contents of the configuration EEprom for this Smart Brick Brain. This string of 89,903 ASCII characters (65,315 for older Smart Brick Brains) is led off by the character string 's5AA5'. As it happens, this is the lead in string for the **LOAD CONFIGURATION** command. This allows you to save the configuration of one or more Smart Brick Brains (or other Smart Bricks and Digital Audio Repeaters) in your computer for later retrieval or archiving, and then simply and easily reload this data at any time. To save the data to the disk of your computer:

1) Invoke this command by hitting 'r' from any configuration screen.

2) Tell your computer to save all ASCII text received from the serial port. It will ask you to give the file that will be created a name and navigate to where you would like it stored. We try to use the extension of '.brn' for these files. If given the option, tell your computer not to change any carriage returns ('CR') or line feeds ('LF'). Many programs want to do this. Once you have told your computer to start saving any incoming text.....

3) Hit 'any' key to start the download from the Smart Brick Brain.

4) When the download is finished (you will see an extra line feed when it finishes), tell your computer to 'stop' saving ASCII text BEFORE YOU DO ANYTHING ELSE! This closes the file and saves it on your computer.

5) Press 'any' key to redraw the screen and continue.

To upload a previously saved configuration:

1) Tell your computer to send out the file saved from the **Download Configuration** command.

The Rack Brain will report on the success or failure of the configuration upload on the LCD display (if installed) and on the screen of the computer.

If you are having trouble getting good uploads, you can set a 'delay between each character' in your modem program. This will slow the transmission down.

The settings of the Lock Counter/Timer Setup screen are not downloaded or restored by these commands.

"$" enter Keys:

This command allows you to enter the keys to open the lock setup screen, or unlock any lock that has been set. If a key has not yet expired, it will be halted at its current count and will not expire. The Smart Brick Brain will report on any key that is entered, and if the key successfully unlocked or or not.

If the Smart Brick Brain has been locked, then it will ask for a password before allowing you to enter configuration mode. If the password clears the lock, and there are no other locks set, then you will enter configuration after you then hit 'any' key.

"x" eXit Setup Mode:

This command is used to exit the setup mode. It is when you exit that the Smart Brick Brain saves the checksums it uses to determine if the configuration has changed. If you power down the Smart Brick Brain without exiting, the Smart Brick Brain will display a 'CS Error' message each time it boots. To clear this, you must enter configuration and exit again, to allow the checksum to be calculated.

After exiting configuration for the final time, you should move the 'write protect' switch to the 'protected' position. This will prevent any accidental or unauthorized

changes in configuration.

If you hit this command in error, hitting an <ESC>ape key will get you back to the setup mode. All of the setup commands which don't take effect immediately, take effect when the eXit command is entered. This includes things like the BAUD RATE, so you will have to change the baud rate of the terminal you are using at this time.

For compatibility with other products which might be on the same RS-422 serial network, this command asks you to enter a 'Y' or 'N'. This lets them know that the setup mode has been exited on this card. If you hit this command by mistake, then you can hit the <ESC>ape key to get back to where you were before.

All other Audio Repeater cards and Smart Brick Brains in the same serial network have their serial ports disabled while any card in the system is in setup mode. This is the only command to which they will respond. After the initial 'X', all of the other cards wait for a 'Y' or 'N' before they will start accepting other serial commands again. If you find that you are having trouble communicating with any of the cards in the system, try entering an 'XN' to trick it into thinking you have exited the configuration mode.

- Rack Smart Brick Brain Show Menu -

This screen is entered through the MORE command from any other screen. It is used to set up the two hundred fifty-five possible shows which a Smart Brick System can control. There are two hundred fifty-five possible shows, valid entries are from 1 to 255 (01H to FFH). Selections through the serial port and 1/4 J6 port are always in Hexadecimal binary numbers. If you are using decimal numbering when setting up shows, you can use the chart at the end of this manual to translate these to Hexadecimal values.

When configuring Smpte shows, the hour byte is used to select the shows. Since these actually come from the Smpte 'hours', and this is a BCD number, valid decimal show numbers for Smpte shows are:

> 01, 02, 03, 04, 05, 06, 07, 08, 09, 16, 17, 18, 19, 20, 21, 22, 23, 24, 25, 32, 33, 34, 35, and 36

The Hexadecimal equivalents for these show numbers are:

> 01, 02, 03, 04, 05, 06, 07, 08, 09, 10, 11, 12, 13, 14, 15, 16, 17, 18, 19, 20, 21, 22, 23, and 24

Show number 00 is invalid for a Smart Brick Brain, but it is valid as a Smpte hour number. For this reason show number 36 (24h) is actually selected when the Smart Brick Brain gets a Smpte 'hour' of 00. An error message will be displayed if the Rack Smart Brick Brain receives a Smpte hour which refers to a show that is not configured for Smpte.

All of the 'show specific' configuration settings can be downloaded from the PC·MACs to the Smart Brick Brain. These are all of the settings that are normally set in this menu. No other settings in the Smart Brick Brain will be affected.

The Show Setup screen looks something like this:

```
- Gilderfluke & Co. Rack Smart Brick Brain - rev. 2.00 copyright 1991-2000 DCM -

                          __1: '***_Show__1_***'

                a) show name
                b) time code- internal
                c) Smart Brick start- ______0 00:00:00.00
                d) Smart Brick end-   __65535 00:36:24.15
                       show length = __65535 00:36:24.15

                e) at end of show- jump immediately to 'next' show
                f) 'next' show- __1: '***_Show__1_***'
                g) frame rate- 30 per second
                h) 'early' starts- increment show number if no request or 'next'

   t) start string- 0        u) multi-disk string- 0        v) end string- 0
   1) LaserDisk 1- ______0 00:00:00.00 | 5) LaserDisk 5- ______0 00:00:00.00
   2) LaserDisk 2- ______0 00:00:00.00 | 6) LaserDisk 6- ______0 00:00:00.00
   3) LaserDisk 3- ______0 00:00:00.00 | 7) LaserDisk 7- ______0 00:00:00.00
   4) LaserDisk 4- ______0 00:00:00.00 |

n) next ^n) next in seq. l) last  k) kopy  m) more...  o) load defaults x) eXit

                                  enter command-
```

As a convenience, the Rack Smart Brick Brain displays the 'time' equivalents for many of the settings. It also calculates the show length by subtracting the show start from the show end. All entries are made in decimal or Hexadecimal values, depending on the setting on the main menu.

"a" Show Name:

This command allows you the enter a 'name' for this show. When this show is played, the 'name' will be displayed on the LCD display on the front of the Smart Brick Brain. Names can be any set of up to sixteen characters. If the name you enter is less than sixteen characters long, the Smart Brick Brain will automatically center the name on the LCD screen. If you don't like the way the Smart Brick Brain centered the name, you can pad it out with additional 'spaces'. Note that 'spaces' will be shown on this screen as an 'underline'. They are displayed as 'spaces' on the LCD screen.

"b" Time Code:

This command toggles through the four possible time codes:

LaserDisk (or DVD)
Smpte
Internal time base
External time base

"c" Brick Start:

This command is used to select where in the memory of the Smart Bricks the show will start. Valid entries are made in up to seven decimal numbers, ranging from 0 to 1,048,575. If you are using a 16K Smart Brick, the upper limit should be below 16,383. If using a 64K Smart Brick, the limit should be kept below 65,535 frames. The Rack Smart Brick Brain will automatically translate this number in to a 'time' value and display it next to the number you have entered. The **BRICK START** is also subtracted from the **BRICK END** time so that the show length is also displayed.

"d" Brick End:

This command is used to select where in the memory of the Smart Brick the show will end if using Smpte, Internal or external clocking. Valid entries are made in up to seven decimal numbers, ranging from 0 to 1,048,575. If using a 64K Smart Brick, the limit should be kept below 65,535 frames. The Rack Smart Brick Brain will automatically translate this number in to a 'time' value and display it next to the number you have entered. The **BRICK START** is also subtracted from the **BRICK END** time so that the show length is also displayed.

"e" At End of this Show:

This command allows you to toggle between four dif-

ferent options which will take place at the end of this show:

a) "wait"
b) "delay, then play 'next' show"
c) "jump immediately to 'next' show"
d) "play show 255/FF and start delay timer"

If set to 'wait', then nothing will happen at the end of this show. The Smart Brick Brain will simply wait for the next start or loop command.

If set to 'Delay' and currently 'looping' shows, the Smart Brick Brain will check the delay switch on the front of the Smart Brick Brain at the end of this show. If the time delay selected is not a zero length (this is the default length for delay '0'), and the switch position is not used to select a schedule, the countdown timer will be started. What happens at the end of this countdown is up to what ever the Smart Brick Brain is configured to do at countdown end (set on the 'Main' configuration screen).

If set to 'Jump Immediately' and currently 'looping' shows, or if the 'Immediate Jumps' setting on the 'Main' Screen is set to allow jumps on either 'looping' or 'playing', the next show will be played immediately after this show ends. The next show can be a specifically requested 'next show', or a return from a specifically requested show if '00' is entered as the 'next show'.

The 'Jump Immediately' setting can be used to build up longer shows from a number of shorter segments. You might want to do this if you are fixing a error in the show burnt onto a LaserDisk (or DVD) (skipping over a slow part of the show, for example), or to build up a show which runs continuously between the main shows, but has a number of 'seams' where it can branch to another show if one is specifically requested. You can program

the animation at these 'seams' so that there will be no jumps when the other shows start and end.

If set to 'play show 255/FF and start delay timer' and 'looping' shows, then this sets up a special mode where the Rack Smart Brick Brain can actually play a string of shows while it is doing a countdown delay. If the delay set on the rotary switch on the front of the Smart Brick Brain is longer than zero length, then show 255 (FFh) will be started immediately at the end of the show. At the end of the countdown, the show in the 'next show' will be played, unless the end of the delay has been set to call up a different show.

Any show between 240 and 255 (0F0h and 0FFh) can be played during the background shows. If any request comes in for another show, shows between 240 and 255 (0F0h and 0FFh) won't be forced as a return show if the requested show ends with a 'whatever is next' 00.

"f" 'Next' Show:

This command is used to select which show will be played next if there were no other higher priority show requests made. Valid entries are from 0 to 255 (00 to FFh). One through two hundred fifty-five select specific shows and any show number can be used. If the current show requests itself, then it will loop until a different show is requested.

Entering a **NEXT SHOW** value of 00 is how you tell the Smart Brick Brain that you want it to drop back into the sequence of shows it had been playing before the last specific show request had been received. As an example:

a) Shows 1 through 6 each request the next consecu-

tive show in line

b) Show 7 requests show number 1 at it's end

c) Show 10 through 16 each request the next consecutive show in line

d) Show 17 has a '00' entered for the next show at it's end

Once started, the shows 1 through 7 will loop for ever

A request comes in for show 10 while playing show 3

Shows 10 through 17 are played

At the end of show 17, the next show played will be show number 4

An exception to the rule above is made for shows 240 through 255 (0F0h through 0FFh). These shows are to be used for 'background' shows. It is show #255 that is called up when both the **IMMEDIATE CHAIN FLAG** and **DELAY FLAGS** are set for a single show. When any of these shows are playing, and another show is requested, show numbers from 240 through 255 won't be saved as the 'return' shows.

"g" Frame Rate:

This command is used to set the **Frame Rate** for this show. This is the number of times each second which the Smart Brick System will update all of the outputs with new data.

Smpte: Valid frame rates for Smpte synchronized shows are 12, 15, 24, 25, and 30 frames per second.

LaserDisk: Valid frame rates for LaserDisk (or DVD) synchronized shows are 15, 25, and 30 frames per second.

Internal Clock: Valid frame rates for Internally clocked shows are 1, 2, 4, 5, 8, 10, 12, 15, 16, 20, 24, 25, 30, 32, 50, 60, 75, and 100 frames per second.

Eternal Clock: Valid frame rates for externally clocked shows are from one to one hundred frames per second.

This entry will accept any value between 00 and 99. 00 is used to enter a one hundred frames per second frame rate. If the entry isn't valid for the time code you are running, a 'E5' error will be displayed on the Heads Up Display when an attempt is made to start the show.

"h" Early Starts:

The user has the choice of what each Smart Brick Brain does when it is still playing this show and it receives a new '**START**' or '**LOOP**' command. The options are:

a) "ignore any starts while running this show"
b) "store requested show(s) and start(s)"
c) "start this show over if no requests or 'next'"
d) "increment show number if no request or 'next'"

The JUMP FORWARD and JUMP BACKWARDS commands have the lowest priority of all possible show requests. Any serial port or 1/4 J6 Port show request will take priority over these.

"t" Start String:

This command is used to select which string will be sent at the start of a show. Although these strings are generally used when you are running a LaserDisk (or DVD) show, you can send them at the start of any type of show if you so desire. They can also be used with serially controlled devices other than LaserDisk (or DVD) players. If an entry of 0 is entered for the start string, no string will be sent at the start of this show. Valid numbers

for accessing the strings are from one through nine, A through F.

If using a Pioneer LaserDisk or DVD player, use the default string '1' for the Start String.

If using a Sony LaserDisk player, use the default string '3' for the Start String.

If using a Panasonic LaserDisk player, use the default string '5' for the Start String.

See the section on string setups for additional details on strings and their habits.

"u" Multi-Disk String:

If not using the LaserDisk Multiplexer, this value should be left blank.

The Rack Smart Brick Brain can sequentially control up to seven LaserDisk Players using the LaserDisk multiplexer (BS-LDMUX15 for Pioneer/Panasonic players or BS-LDMUX25 for Sony). This attaches to the Rack Smart Brick Brain through its relay outputs and RS-422 serial port as shown in the following drawing. Indicator LEDs show serial data being sent to and received from the different LaserDisks. The serial ports on the LaserDisk Multiplexer are at RS-232 levels. Standard fifteen (Pioneer or Panasonic) or twenty-five pin (Sony) cables can be used to attach the LaserDisks to it. A small twelve VAC power supply runs the LaserDisk Multiplexer. The Rack Smart Brick Brain's relay outputs can not be used for any other purpose when running multiple LaserDisk players.

The MultiDisk string will be sent to each of the LaserDisk (or DVD) players in turn. Typically the MultiDisk string is just a LaserStart special string character (01). This will position all of the LaserDisks (or DVD)s to the selected frame and pause them. Players which can't search and

then pause can not be used in MultiDisk applications. After the final player has been positioned, the Start String is sent to all of the players simultaneously. This start string is just like the Start String you would use in any single LaserDisk (or DVD) application, except the LaserStart special string character (01) has been omitted. The LaserStart special string character (01) in a Start String would make all of the players try to find the frame number being used by the first LaserDisk (or DVD) player.

During the Start String, while running the show and again during the End String, the Rack Smart Brick Brain will be talking to all of the LaserDisks (or DVD)s in parallel while only listening to the first one. All the players are started simultaneously and will continue to play in sync (especially if they are linked together using their 'genlock' inputs and outputs). Once started, any problem with players two through seven will be ignored.

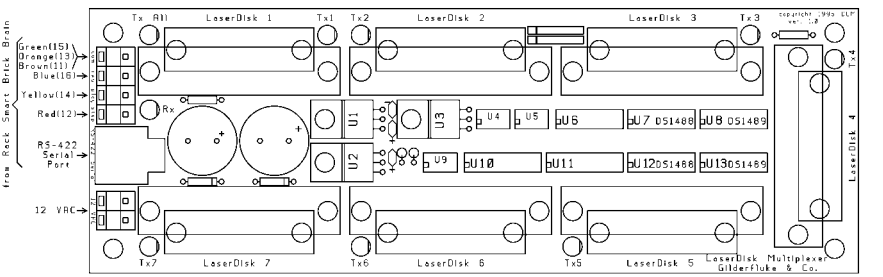

This command is used to select which string will be sent to spin up multiple LaserDisks (or DVD)s. If anything other than zero is entered, the selected string will be sent to each of the LaserDisk (or DVD) players in turn, starting with number seven and working down to number one. The Rack Smart Brick Brain will then send the Start String. Although multi-disk strings are generally used when you are running a LaserDisk (or DVD) show, you can send them at the start of any type of show if you so desire.

They can also be used with serially controlled devices other than LaserDisk (or DVD) players. Valid numbers for accessing the strings are from one through nine, A through F. If not using the LaserDisk Multiplexer, this value should be left blank. See the section on string setups for additional details on strings and their habits.

"v" End String:

This command is used to select which string will be sent at the end of a show. Although these strings are generally used when you are running a LaserDisk (or DVD) show, you can send them at the end of any type of show if you so desire. They can also be used with serially controlled devices other than LaserDisk (or DVD) players. If an entry of 0 is entered for the end string, no string will be sent at the end of this show. Valid numbers for accessing the strings are from one through nine, A through F.

If using a Pioneer LaserDisk or DVD player, use the default string '2' for the End String.

If using a Sony LaserDisk player, use the default string '3' for the End String.

If using a Panasonic LaserDisk player, use the default string '7' for the End String.

See the section on string setups for additional details on strings and their habits.

LaserDisk Starts:

"1" LaserDisk 1:
"2" LaserDisk 2:
"3" LaserDisk 3:
"4" LaserDisk 4:
"5" LaserDisk 5:
"6" LaserDisk 6:

"7" LaserDisk 7:

This command is used to select where on the LaserDisk (or DVD) the show is actually found. Valid entries are made in 7 decimal numbers, ranging from 0 to 1,048,575. Constant Angular Velocity (CAV) LaserDisks support a maximum 54,000 frames per side. CLV LaserDisks support a maximum of 107,999 frames per side. At the start of a show, the special 'LaserSearch string character '01' will tell the Smart Brick Brain to start the LaserDisk player (if needed) and search it for this frame number.

If a single LaserDisk (or DVD) is being used, its frame number must be entered in the LaserDisk first slot. LaserSearch commands which are located in the MultiDisk Strings will be searched starting with LaserDisk number seven. Any LaserDisk (or DVD) that has a zero entered will be skipped during MultiDisk searches.

"n" Next Entry:

This command is used to switch to the next show's setup screen.

<control>+"n" Next In Sequence:

Instead of shifting to the next numbered show, this command will shift you to the 'Next' show that you have selected. This is useful for tracing through sequences of shows that you have programmed.

"l" Last Entry:

This command is used to switch to the last show's setup screen.

"k" Kopy Another Show:

This command allows you to copy the data found in any other show, and put that data into the show you are

now displaying. As shows are often just about identical except for their start and end frames, this can save a great deal of time when setting up shows.

"m" More.....:

This command allows you to select from the other menus:

1) **Main Menu.** This brings you back to the main menu.
2) **Show Setup.** This will ask you which of the 255 possible shows you want to modify.
3) **String Setup.** This allows you to modify the strings used to control LaserDisk (or DVD)s.
4) **Delay.** This allows you to set how long each of the sixteen possible countdown delays are.
5) **Schedules.** This is where you modify the ninety different possible schedules.
6) **Calendar.** This is where you select which schedule will be used on any day.

"o" Load Defaults:

This command allows you to reload a single show, or all of the shows, with the default configuration settings shown in the menu above.

"r" Download Configuration:

This command is used to store the current configuration as a file on your computer. This file, once saved, can be restored to any 2.00 (or later) Smart Brick Brain by simply sending it back to the Brain. If the serial address of the saved file is different from the current address of the Smart Brick Brain, then you should only load it from within the Smart Brick Brain's configuration mode. Otherwise, the addresses will not match, and the Smart Brick Brain will ignore the file. (Before you exit configuration mode

after doing an upload, check and correct the serial address for this Smart Brick Brain on the 'Main' menu).

This command responds with the current contents of the configuration EEprom for this Smart Brick Brain. This string of 89,903 ASCII characters (65,315 for older Smart Brick Brains) is led off by the character string 's5AA5'. As it happens, this is the lead in string for the **LOAD CONFIGURATION** command. This allows you to save the configuration of one or more Smart Brick Brains (or other Smart Bricks and Digital Audio Repeaters) in your computer for later retrieval or archiving, and then simply and easily reload this data at any time. To save the data to the disk of your computer:

1) Invoke this command by hitting 'r' from any configuration screen.

2) Tell your computer to save all ASCII text received from the serial port. It will ask you to give the file that will be created a name and navigate to where you would like it stored. We try to use the extension of '.brn' for these files. If given the option, tell your computer not to change any carriage returns ('CR') or line feeds ('LF'). Many programs want to do this. Once you have told your computer to start saving any incoming text.....

3) Hit 'any' key to start the download from the Smart Brick Brain.

4) When the download is finished (you will see an extra line feed when it finishes), tell your computer to 'stop' saving ASCII text BEFORE YOU DO ANYTHING ELSE! This closes the file and saves it on your computer.

5) Press 'any' key to redraw the screen and continue.

To upload a previously saved configuration:

1) Tell your computer to send out the file saved from

the **Download Configuration** command.

The Rack Brain will report on the success or failure of the configuration upload on the LCD display (if installed) and on the screen of the computer.

If you are having trouble getting good uploads, you can set a 'delay between each character' in your modem program. This will slow the transmission down.

The settings of the Lock Counter/Timer Setup screen are not downloaded or restored by these commands.

"$" enter Keys:

This command allows you to enter the keys to open the lock setup screen, or unlock any lock that has been set. If a key has not yet expired, it will be halted at its current count and will not expire. The Smart Brick Brain will report on any key that is entered, and if the key successfully unlocked or or not.

If the Smart Brick Brain has been locked, then it will ask for a password before allowing you to enter configuration mode. If the password clears the lock, and there are no other locks set, then you will enter configuration after you then hit 'any' key.

"x" eXit Setup Mode:

This command is used to exit the setup mode. It is when you exit that the Smart Brick Brain saves the checksums it uses to determine if the configuration has changed. If you power down the Smart Brick Brain without exiting, the Smart Brick Brain will display a 'CS Error' message each time it boots. To clear this, you must enter configuration and exit again, to allow the checksum to be calculated.

After exiting configuration for the final time, you

should move the 'write protect' switch to the 'protected' position. This will prevent any accidental or unauthorized changes in configuration.

If you hit this command in error, hitting an <ESC>ape key will get you back to the setup mode. All of the setup commands which don't take effect immediately, take effect when the eXit command is entered. This includes things like the BAUD RATE, so you will have to change the baud rate of the terminal you are using at this time.

For compatibility with other products which might be on the same RS-422 serial network, this command asks you to enter a 'Y' or 'N'. This lets them know that the setup mode has been exited on this card. If you hit this command by mistake, then you can hit the <ESC>ape key to get back to where you were before.

All other Audio Repeater cards and Smart Brick Brains in the same serial network have their serial ports disabled while any card in the system is in setup mode. This is the only command to which they will respond. After the initial 'X', all of the other cards wait for a 'Y' or 'N' before they will start accepting other serial commands again. If you find that you are having trouble communicating with any of the cards in the system, try entering an 'XN' to trick it into thinking you have exited the configuration mode.

- Rack Smart Brick Brain String Setup Menu -

Strings are the ASCII characters that are send out from, or received by a Smart Brick Brain at the beginning or end of a show. Requesting the String Setup Menu brings up the following menu.

Each string can be up to ten characters long. If a longer string of characters is needed, it can be continued on the next line. A space with a zero in it tells the Smart Brick Brain that the end of a string has been found.

The menu as shown is the default for the Rack Smart Brick Brain. The first string is the start string which is typically used to start a Pioneer LaserDisk (or DVD) player. The second string is that which is used to stop a Pioneer LaserDisk (or DVD) player. The third string is used to start a Sony LaserDisk player, and the fourth is to stop one.

```
- Gilderfluke & Co. Rack Smart Brick Brain - rev. 2.00 copyright 1991-2000 DCM
-


                                String Setup

   1) string 1 |serch|__80_|__76_|__13_|(_82)|(_13)|_____|_____|_____|_____|
   2) string 2 |__83_|__84_|__13_|(_82)|(_13)|_____|_____|_____|_____|_____|
   3) string 3 |serch|__58_|(_10)|_____|_____|_____|_____|_____|_____|_____|
   4) string 4 |__79_|(_10)|_____|_____|_____|_____|_____|_____|_____|_____|
   5) string 5 |serch|___2_|__79_|__80_|__76_|___3_|(__6)|(__2)|(_79)|(_80)|
   6) string 6 |(_76)|(__3)|_____|_____|_____|_____|_____|_____|_____|_____|
   7) string 7 |___2_|__79_|__80_|__65_|___3_|(__6)|(__2)|(_79)|(_80)|(_65)|
   8) string 8 |(__3)|_____|_____|_____|_____|_____|_____|_____|_____|_____|
   9) string 9 |_____|_____|_____|_____|_____|_____|_____|_____|_____|_____|
   A) string A |_____|_____|_____|_____|_____|_____|_____|_____|_____|_____|
   B) string B |_____|_____|_____|_____|_____|_____|_____|_____|_____|_____|
   C) string C |_____|_____|_____|_____|_____|_____|_____|_____|_____|_____|
   D) string D |_____|_____|_____|_____|_____|_____|_____|_____|_____|_____|
   E) string E |_____|_____|_____|_____|_____|_____|_____|_____|_____|_____|
   F) string F |_____|_____|_____|_____|_____|_____|_____|_____|_____|_____|

    m) more...    o) load defaults    r) download configuration    x) eXit

                                enter command-
```

1-9, A-F Alter Strings:

The commands one through nine, a through F are used to alter the various strings. For details on these, refer to the String section of this manual.

"m" More.....:

This command allows you to select from the other menus:

1) **Main Menu.** This brings you back to the main menu.
2) **Show Setup.** This will ask you which of the 255 possible shows you want to modify.
3) **String Setup.** This allows you to modify the strings used to control LaserDisk (or DVD)s.
4) **Delay.** This allows you to set how long each of the sixteen possible countdown delays are.
5) **Schedules.** This is where you modify the ninety different possible schedules.
6) **Calendar.** This is where you select which schedule will be used on any day.

"o" Load Defaults:

This command allows you to reload the default configuration settings shown in the menu above. The default strings are used as follows:

1) Pioneer LaserDisk and DVD player start string. Spins up player, finds frame, and then plays.
2) Pioneer LaserDisk and DVD player end string. 'Stills' player, freezing the image (LD-V8000 only).
3) Sony LaserDisk player start string. Spins up player, finds frame, and then plays.
4) Sony LaserDisk player end string. 'Stills' player.
5) Panasonic LaserDisk player start string. Spins up

player, finds frame, and then plays.

7) Panasonic LaserDisk player end string. 'Stills' player.

"r" Download Configuration:

This command is used to store the current configuration as a file on your computer. This file, once saved, can be restored to any 2.00 (or later) Smart Brick Brain by simply sending it back to the Brain. If the serial address of the saved file is different from the current address of the Smart Brick Brain, then you should only load it from within the Smart Brick Brain's configuration mode. Otherwise, the addresses will not match, and the Smart Brick Brain will ignore the file. (Before you exit configuration mode after doing an upload, check and correct the serial address for this Smart Brick Brain on the 'Main' menu).

This command responds with the current contents of the configuration EEprom for this Smart Brick Brain. This string of 89,903 ASCII characters (65,315 for older Smart Brick Brains) is led off by the character string 's5AA5'. As it happens, this is the lead in string for the **LOAD CONFIGURATION** command. This allows you to save the configuration of one or more Smart Brick Brains (or other Smart Bricks and Digital Audio Repeaters) in your computer for later retrieval or archiving, and then simply and easily reload this data at any time. To save the data to the disk of your computer:

1) Invoke this command by hitting 'r' from any configuration screen.

2) Tell your computer to save all ASCII text received from the serial port. It will ask you to give the file that will be created a name and navigate to where you would like it stored. We try to use the extension of '.brn' for these files. If given the option, tell your computer not to change any carriage returns ('CR') or

line feeds ('LF'). Many programs want to do this. Once you have told your computer to start saving any incoming text.....

3) Hit 'any' key to start the download from the Smart Brick Brain.

4) When the download is finished (you will see an extra line feed when it finishes), tell your computer to 'stop' saving ASCII text BEFORE YOU DO ANYTHING ELSE! This closes the file and saves it on your computer.

5) Press 'any' key to redraw the screen and continue.

To upload a previously saved configuration:

1) Tell your computer to send out the file saved from the **Download Configuration** command.

The Rack Brain will report on the success or failure of the configuration upload on the LCD display (if installed) and on the screen of the computer.

If you are having trouble getting good uploads, you can set a 'delay between each character' in your modem program. This will slow the transmission down.

The settings of the Lock Counter/Timer Setup screen are not downloaded or restored by these commands.

"$" enter Keys:

This command allows you to enter the keys to open the lock setup screen, or unlock any lock that has been set. If a key has not yet expired, it will be halted at its current count and will not expire. The Smart Brick Brain will report on any key that is entered, and if the key successfully unlocked or or not.

If the Smart Brick Brain has been locked, then it will ask for a password before allowing you to enter configuration mode. If the password clears the lock, and there are no other locks set, then you will enter configuration after

you then hit 'any' key.

"x" eXit Setup Mode:

This command is used to exit the setup mode. It is when you exit that the Smart Brick Brain saves the checksums it uses to determine if the configuration has changed. If you power down the Smart Brick Brain without exiting, the Smart Brick Brain will display a 'CS Error' message each time it boots. To clear this, you must enter configuration and exit again, to allow the checksum to be calculated.

After exiting configuration for the final time, you should move the 'write protect' switch to the 'protected' position. This will prevent any accidental or unauthorized changes in configuration.

If you hit this command in error, hitting an <ESC>ape key will get you back to the setup mode. All of the setup commands which don't take effect immediately, take effect when the eXit command is entered. This includes things like the BAUD RATE, so you will have to change the baud rate of the terminal you are using at this time.

For compatibility with other products which might be on the same RS-422 serial network, this command asks you to enter a 'Y' or 'N'. This lets them know that the setup mode has been exited on this card. If you hit this command by mistake, then you can hit the <ESC>ape key to get back to where you were before.

All other Audio Repeater cards and Smart Brick Brains in the same serial network have their serial ports disabled while any card in the system is in setup mode. This is the only command to which they will respond. After the initial 'X', all of the other cards wait for a 'Y' or 'N' before they will

start accepting other serial commands again. If you find that you are having trouble communicating with any of the cards in the system, try entering an 'XN' to trick it into thinking you have exited the configuration mode.

- Smart Brick Brain Delay Setup Menu -

This menu is used to set the sixteen possible different delays that can be accessed from the front panel rotary switch. Any of these delays can be set anywhere between 00:00:00 and 99:59:59. If at the start or end of a delay a length of zero is found, the delay will be stopped. If you want to disable all the displays, you can simply enter zero lengths for all sixteen possible entries.

```
- Gilderfluke & Co. Rack Smart Brick Brain - rev. 2.00 copyright 1991-2000 DCM -

                              Delay Setup

                         0) delay 0- 00:00:00
                         1) delay 1- 00:00:15
                         2) delay 2- 00:00:30
                         3) delay 3- 00:01:00
                         4) delay 4- 00:02:00
                         5) delay 5- 00:03:00
                         6) delay 6- 00:05:00
                         7) delay 7- 00:07:30
                         8) delay 8- 00:10:00
                         9) delay 9- 00:15:00
                         A) delay A- 00:20:00
                         B) delay B- 00:25:00
                         C) delay C- use schedule 32
                         D) delay D- use schedule 27
                         E) delay E- use schedule 54
                         F) delay F- use schedule 11

    m) more...    o) load defaults    r) download configuration    x) eXit

                            enter command-
```

0-9, A-F Set Delays:

These commands are used to set the length of each of the sixteen possible delays.

"m" More.....:

This command allows you to select from the other menus:

1) Main Menu. This brings you back to the main

menu.

2) **Show Setup.** This will ask you which of the 255 possible shows you want to modify.
3) **String Setup.** This allows you to modify the strings used to control LaserDisk (or DVD)s.
4) **Delay.** This allows you to set how long each of the sixteen possible countdown delays are.
5) **Schedules.** This is where you modify the ninety different possible schedules.
6) **Calendar.** This is where you select which schedule will be used on any day.

"o" Load Defaults:

This command allows you to reload the default configuration settings shown in the menu above.

"r" Download Configuration:

This command is used to store the current configuration as a file on your computer. This file, once saved, can be restored to any 2.00 (or later) Smart Brick Brain by simply sending it back to the Brain. If the serial address of the saved file is different from the current address of the Smart Brick Brain, then you should only load it from within the Smart Brick Brain's configuration mode. Otherwise, the addresses will not match, and the Smart Brick Brain will ignore the file. (Before you exit configuration mode after doing an upload, check and correct the serial address for this Smart Brick Brain on the 'Main' menu).

This command responds with the current contents of the configuration EEprom for this Smart Brick Brain. This string of 89,903 ASCII characters (65,315 for older Smart Brick Brains) is led off by the character string 's5AA5'. As it happens, this is the lead in string for the **LOAD CONFIGURATION** command. This allows you to save the configuration of one or more Smart Brick Brains (or other Smart

Bricks and Digital Audio Repeaters) in your computer for later retrieval or archiving, and then simply and easily reload this data at any time. To save the data to the disk of your computer:

1) Invoke this command by hitting 'r' from any configuration screen.

2) Tell your computer to save all ASCII text received from the serial port. It will ask you to give the file that will be created a name and navigate to where you would like it stored. We try to use the extension of '.brn' for these files. If given the option, tell your computer not to change any carriage returns ('CR') or line feeds ('LF'). Many programs want to do this. Once you have told your computer to start saving any incoming text.....

3) Hit 'any' key to start the download from the Smart Brick Brain.

4) When the download is finished (you will see an extra line feed when it finishes), tell your computer to 'stop' saving ASCII text BEFORE YOU DO ANYTHING ELSE! This closes the file and saves it on your computer.

5) Press 'any' key to redraw the screen and continue.

To upload a previously saved configuration:

1) Tell your computer to send out the file saved from the **Download Configuration** command.

The Rack Brain will report on the success or failure of the configuration upload on the LCD display (if installed) and on the screen of the computer.

If you are having trouble getting good uploads, you can set a 'delay between each character' in your modem program. This will slow the transmission down.

The settings of the Lock Counter/Timer Setup screen

are not downloaded or restored by these commands.

"$" enter Keys:

This command allows you to enter the keys to open the lock setup screen, or unlock any lock that has been set. If a key has not yet expired, it will be halted at its current count and will not expire. The Smart Brick Brain will report on any key that is entered, and if the key successfully unlocked or or not.

If the Smart Brick Brain has been locked, then it will ask for a password before allowing you to enter configuration mode. If the password clears the lock, and there are no other locks set, then you will enter configuration after you then hit 'any' key.

"x" eXit Setup Mode:

This command is used to exit the setup mode. It is when you exit that the Smart Brick Brain saves the checksums it uses to determine if the configuration has changed. If you power down the Smart Brick Brain without exiting, the Smart Brick Brain will display a 'CS Error' message each time it boots. To clear this, you must enter configuration and exit again, to allow the checksum to be calculated.

After exiting configuration for the final time, you should move the 'write protect' switch to the 'protected' position. This will prevent any accidental or unauthorized changes in configuration.

If you hit this command in error, hitting an <ESC>ape key will get you back to the setup mode. All of the setup commands which don't take effect immediately, take effect when the eXit command is entered. This includes things like the BAUD RATE, so you will have to change the baud rate of the terminal you are using at

this time.

For compatibility with other products which might be on the same RS-422 serial network, this command asks you to enter a 'Y' or 'N'. This lets them know that the setup mode has been exited on this card. If you hit this command by mistake, then you can hit the <ESC>ape key to get back to where you were before.

All other Audio Repeater cards and Smart Brick Brains in the same serial network have their serial ports disabled while any card in the system is in setup mode. This is the only command to which they will respond. After the initial 'X', all of the other cards wait for a 'Y' or 'N' before they will start accepting other serial commands again. If you find that you are having trouble communicating with any of the cards in the system, try entering an 'XN' to trick it into thinking you have exited the configuration mode.

- Smart Brick Brain 1/4 J6 Setup Menu -

This menu is used to configure the individual optically isolated inputs on the 1/4 J6 cable. The last two settings on the menu can also be set on the main menu. Because this menu shows a snapshot of the state of the 1/4 J6 input each time it redraws, it is also a useful tool for diagnosing wiring problems with this port.

```
- Gilderfluke & Co. Rack Smart Brick Brain - rev. 2.00 copyright 1991-2000 DCM -

                              1/4-J6 Input Setup

                            PAUSE  CONT.                        STOP
  INPUT and EDGE            [rtz]  [inc]  START  LOOP   STOP  at END TAPE DECK
 a) J6 input Closing:     |______|______|______|__on__|______|______|_________|
 b) J6 input Opening:     |______|______|______|______|______|______|_________|

 0) bit 0 (now = closed): sequentially start shows __5 thru _17 (next = __5)
 1) bit 1 (now =  open ): randomly start (loop) shows _22 thru _42
 2) bit 2 (now =  open ): randomly start (loop) shows _55 thru 117
 3) bit 3 (now =  open ): loop show #__8: '***_Show___8_***'
 4) bit 4 (now = closed): Direct select show __5: '***_Show___5_***'
 5) bit 5 (now =  open ): Direct select show __6: '***_Show___6_***'
 6) bit 6 (now =  open ): Select schedule 12
 7) bit 7 (now =  open ): Select schedule 17

                            c) select from J6- yes
                            d) direct select- yes

    m) more...    o) load defaults    r) download configuration    x) eXit

                                enter command-
```

Input Triggering Commands:
"a" '1/4 J6 Port' Input Closing Edge:
"b" '1/4 J6 Port' Input Opening Edge:

Each Rack Smart Brick Brain has two opto-isolated external inputs, one push button input on the front, and one 1/4 J6 Port input. Additionally, the Smart Brick Brain treats the end of a countdown just like it would treat any of the other inputs. These commands are used to select what actions will take place on each edge of each of the 1/4 J6 Port inputs. Note that both rising and falling

edge actions are available to you. This allows you to to do things like start a show on a closing edge and then stop it on the opening edge of the same input. This would make it a 'run while' input.

A closing edge on the 1/4 J6 Port is considered to be any of the eight inputs closing if the **DIRECT SELECT** option is 'on', or any change in the input (except going to all inputs open) if the **DIRECT SELECT** option is off. A opening edge on the 1/4 J6 Port is when all eight of the inputs go to an open condition.

The 1/4 J-6 input can be selected on the Rack Smart Brick Card to use an external power supply or the internal power supply. Connections for these are shown in the first section of this manual.

If you want the Smart Brick System to start playing shows as soon as it is powered up, you can set a '**START**' or '**START LOOPING**' command on the opening edge of any of the inputs. On power-up, the Smart Brick Brain will check all of the inputs and find that the one you are using has just opened. It will then act upon any commands you have set for this edge. This would normally be a '**START**' command if you only want the Smart Brick System to play a single show, or a '**START LOOPING**' command if you want it to continue playing shows until it is told to stop. We normally use the 'PB opening' edge to start shows on power-up (you can use any of the 'opening' edges) and then put in a '**STOP**' or '**STOP AT END**' command on the 'PB closing' command so that we can stop the shows once they have started.

If multiple inputs to the system arrive simultaneously, they have the following priorities:

1) '1/4 J6 Port" INPUTS
2) 'GREEN' input

3) 'BLUE' INPUT
4) 'PB' INPUT

This will probably happen only on power-up.

The commands have the following effects:

Pause/Return to Zero (RTZ):

a) **If running an Internally, Smpte or LaserDisk (or DVD) clocked show:** This command causes the currently running show to be paused at the current frame. If the show is LaserDisk (or DVD) clocked, the string 'E' will be sent when the show is paused. This string is typically configured to pause the LaserDisk (or DVD). A pause will be cleared if a new show is started, or the Continue command is used.

b) **If running an Externally clocked show:** When running an internally clocked show, this command causes the frame counters to be reset back to the start of the show. During countdowns, this command causes a new countdown delay to be started based on the current thumbwheel switch settings.

Continue/Increment:

a) **If running an Internally, Smpte or LaserDisk (or DVD) clocked show:** This command clears a pause in the currently running show which was set by the Pause command. If a show has been paused, then the show will continue from the current frame. If the show is LaserDisk (or DVD) clocked, then string 'F' will be sent when the show is continued. This string is typically configured to cause the LaserDisk (or DVD) to start playing from the current frame. If this command is issued and the show has not been paused, it will have no effect.

b) **If running an externally clocked show:** This command enables an input to advance frames on either the rising or falling (or both) edges of an input when running an externally clocked show.

Start:

This command causes the Smart Brick Brain to start playing the next show in line. At the end of the show, the Smart Brick Brain will stop unless the show which is played has the **IMMEDIATE CHAIN FLAG** set AND the **ALLOW CHAINS** flag is also on. Under those circumstances, it will continue to play shows until those conditions are not met.

If the '**LOOPING SHOWS**' flag is set, sending any type of '**START**' command to the Smart Brick Brain will reset this flag.

Loop:

This command acts much like a **START** command, except that it also sets the '**LOOPING SHOWS**' flag. With the this flag set, it is possible to set a sequence of shows playing in any order. The shows can be played with no delay or with a preset delay between each. Since the 'next' show can be any show you ask for, one show can be played over and over again, or you can set up a sequence of shows which will be repeated until the Smart Brick Brain is told to stop.

When the '**LOOPING SHOWS**' flag set, the Smart Brick Brain will check to see if the '**IMMEDIATE CHAIN**' or '**DELAY**' flags are set when it has finished playing a show. If the show has a the '**IMMEDIATE CHAIN**' flag set, then it will immediately start playing the 'next' show, which you can set to be any show in

the system. If the '**DELAY**' flag is set, then the Smart Brick Brain will check to see if the thumbwheel switch on its front is set to anything other than 0. If it is, then it will then start this new delay countdown. At the end of the countdown, whatever 'Countdown end' actions are set will take place just as though a switch closure input had just happened. In most cases this will be another **LOOP** command, which will then start the next show. At the end of that show, the whole process will then start over.

Stop:

This command will stop any show which is playing immediately and unconditionally.

Stop at End:

This command resets the '**LOOPING SHOWS**' flag. This means that the shows will stop playing at the normal end of show and won't start a new countdown under any circumstances, and won't chain unless the **ALLOW CHAINS** flag is set and there is a request for an **IMMEDIATE CHAIN** at the end of the current show.

Tape Deck:

These allow you to trigger the START, STOP or REWIND relay outputs from one of the external inputs or end of countdown.

1/4 J6 Input Triggering Commands:

"0" Bit 0 Input Closing Edge:
"1" Bit 1 Input Closing Edge:
"2" Bit 2 Input Closing Edge:
"3" Bit 3 Input Closing Edge:
"4" Bit 4 Input Closing Edge:

"5" Bit 5 Input Closing Edge:
"6" Bit 6 Input Closing Edge:
"7" Bit 7 Input Closing Edge:

Additional options can be set individually for the eight inputs on the 1/4 J6 cable. The current status of each of these inputs (either opened or closed) is also displayed. For each input, you can select the edge to trigger shows Sequentially, Randomly or Normally. If you select:

a) **Sequentially:** If you select this option, then you are asked for the range of shows that you want to play. Each time this input is triggered, then the next show in this range will be played. As an example of this, if you select a range of shows of ten to twenty: Show ten will be played on the first on the first edge, show eleven on the next, etc.. After show twenty plays, then the next show will be show ten again. Each time this window is displayed, the 'next' show which will be played on each input which has been set for sequential operation will be displayed.

   If the range of shows is just one show, then the text displayed will show that only a single show will be requested and played on this input.

b) **Randomly:** If you select this option, then you are asked for the range of shows that you want to play on this input. Each time this edge is triggered, one of the shows within this range will be chosen at random and played. As an example of this, if you select a range of shows of ten to twenty: Show ?? will be played on the first on the first edge, show ?? on the next, etc.. The randomizer uses a separate counter for each of these inputs. This counts at ten Hertz from the first show selected through the last

and then recycles. When the user selects an input which has been configured with this option, the Smart Brick Brain uses the current value of this counter to select and play a next show. If the randomizer played the same show the last time, it will spin the randomizer another time to try and select another show to play. If after this second spin, the same show comes up, then it will be played.

c) **Normally:** The inputs will behave as described as set by the next two options. You can select whether the input will pause, continue, stop, stop at end, start, start looping, or trigger a tape deck output.

"c" Select from J6:

If more than one show is stored on a single Smart Brick System, each one can be accessed individually and played back. Up to two hundred fifty-five of these shows can be stored on a single Smart Brick System. These requests can be made through the serial port or through the 1/4 J6 Port.

This toggle enables the 1/4 J6 Port for requesting the shows on this Smart Brick System. There are two methods of selecting shows from this port. Which one is used is selected by the **DIRECT SELECT** command.

"d" Direct Select:

This command is used to switch the 1/4 J6 Port over to selecting one of eight shows directly, instead of using binary inputs for requesting up to two hundred fifty-five different shows. The **DIRECT SELECT** is useful when you have eight or less shows which need to be called up through the 1/4 J6 Port. The 1/4 J6 Port can be wired directly to up to eight different pushbuttons. When any of these buttons are pressed it will select the appropriate show. The

first button pushed will be played at the next START or **START LOOPING** command, unless it is overridden by another show request from the serial ports. (The Brain can also be told to start playing the newly requested show immediately if you tell the Smart Brick Brain to **START** or **START LOOPING** on the input to the 1/4 J-6 port.)

If this mode is off, then up to two hundred fifty-five different shows can be selected through the 1/4 J6 Port. The 1/4 J6 Port can be connected directly to the output of a computer or Animation Control System. If you need to connect it to pushbuttons, you will need to use diodes or a keyboard with an encoder (available from Gilderfluke & Company) to encode a binary number to be sent to the 1/4 J6 Port.

As with changes in inputs on the A, B, or PB input, changes on the 1/4 J6 Port can be used to **START**, stop, or whatever a Smart Brick Brain. If the **DIRECT SELECT** option is 'on', then a rising edge is on any new arrival of a new closure, and a falling edge is when all input lines are opened. If the **DIRECT SELECTION** is 'off', then a rising edge is on any change in the 1/4 J6 Port except for when all of the inputs go open, which is considered to be a falling edge.

"m" More.....:

This command allows you to select from the other menus:

1) **Main Menu.** This brings you back to the main menu.
2) **Show Setup.** This will ask you which of the 255 possible shows you want to modify.
3) **String Setup.** This allows you to modify the strings used to control LaserDisk (or DVD)s.
4) **Delay.** This allows you to set how long each of the

sixteen possible countdown delays are.

5) **Schedules.** This is where you modify the ninety different possible schedules.
6) **Calendar.** This is where you select which schedule will be used on any day.

"o" Load Defaults:

This command allows you to reload the default configuration settings shown in the menu above. You can reload just the current schedule, or all of ninety of them.

"r" Download Configuration:

This command is used to store the current configuration as a file on your computer. This file, once saved, can be restored to any 2.00 (or later) Smart Brick Brain by simply sending it back to the Brain. If the serial address of the saved file is different from the current address of the Smart Brick Brain, then you should only load it from within the Smart Brick Brain's configuration mode. Otherwise, the addresses will not match, and the Smart Brick Brain will ignore the file. (Before you exit configuration mode after doing an upload, check and correct the serial address for this Smart Brick Brain on the 'Main' menu).

This command responds with the current contents of the configuration EEprom for this Smart Brick Brain. This string of 89,903 ASCII characters (65,315 for older Smart Brick Brains) is led off by the character string 's5AA5'. As it happens, this is the lead in string for the **LOAD CONFIGURATION** command. This allows you to save the configuration of one or more Smart Brick Brains (or other Smart Bricks and Digital Audio Repeaters) in your computer for later retrieval or archiving, and then simply and easily reload this data at any time. To save the data to the disk of your computer:

1) Invoke this command by hitting 'r' from any configuration screen.

2) Tell your computer to save all ASCII text received from the serial port. It will ask you to give the file that will be created a name and navigate to where you would like it stored. We try to use the extension of '.brn' for these files. If given the option, tell your computer not to change any carriage returns ('CR') or line feeds ('LF'). Many programs want to do this. Once you have told your computer to start saving any incoming text.....

3) Hit 'any' key to start the download from the Smart Brick Brain.

4) When the download is finished (you will see an extra line feed when it finishes), tell your computer to 'stop' saving ASCII text BEFORE YOU DO ANYTHING ELSE! This closes the file and saves it on your computer.

5) Press 'any' key to redraw the screen and continue.

To upload a previously saved configuration:

1) Tell your computer to send out the file saved from the **Download Configuration** command.

The Rack Brain will report on the success or failure of the configuration upload on the LCD display (if installed) and on the screen of the computer.

If you are having trouble getting good uploads, you can set a 'delay between each character' in your modem program. This will slow the transmission down.

The settings of the Lock Counter/Timer Setup screen are not downloaded or restored by these commands.

"$" enter Keys:

This command allows you to enter the keys to open the lock setup screen, or unlock any lock that has been

set. If a key has not yet expired, it will be halted at its current count and will not expire. The Smart Brick Brain will report on any key that is entered, and if the key successfully unlocked or or not.

If the Smart Brick Brain has been locked, then it will ask for a password before allowing you to enter configuration mode. If the password clears the lock, and there are no other locks set, then you will enter configuration after you then hit 'any' key.

"x" eXit Setup Mode:

This command is used to exit the setup mode. It is when you exit that the Smart Brick Brain saves the checksums it uses to determine if the configuration has changed. If you power down the Smart Brick Brain without exiting, the Smart Brick Brain will display a 'CS Error' message each time it boots. To clear this, you must enter configuration and exit again, to allow the checksum to be calculated.

After exiting configuration for the final time, you should move the 'write protect' switch to the 'protected' position. This will prevent any accidental or unauthorized changes in configuration.

If you hit this command in error, hitting an <ESC>ape key will get you back to the setup mode. All of the setup commands which don't take effect immediately, take effect when the eXit command is entered. This includes things like the BAUD RATE, so you will have to change the baud rate of the terminal you are using at this time.

For compatibility with other products which might be on the same RS-422 serial network, this command asks you to enter a 'Y' or 'N'. This lets them know that the setup

mode has been exited on this card. If you hit this command by mistake, then you can hit the <ESC>ape key to get back to where you were before.

All other Audio Repeater cards and Smart Brick Brains in the same serial network have their serial ports disabled while any card in the system is in setup mode. This is the only command to which they will respond. After the initial 'X', all of the other cards wait for a 'Y' or 'N' before they will start accepting other serial commands again. If you find that you are having trouble communicating with any of the cards in the system, try entering an 'XN' to trick it into thinking you have exited the configuration mode.

Is anyone keeping track of these blank pages?

- Smart Brick Brain Schedule Setup Menu -

This menu is used to configure any of the ninety different schedules. Using the Calendar Setup Menu, any one of the ninety schedules can be selected to set the times that shows will run on any given day of the year. You can set which schedule will be used on what days up to one year in advance.

```
- Gilderfluke & Co. Rack Smart Brick Brain - rev. 2.00 copyright 1991-2000 DCM
-

                                Schedule __1 Setup
  1)   5@12:00 |  2)  17@18:00 |  3)   1@02:03 |  4) ???@15:30 |  5)    none
  6)    none   |  7)    none   |  8)    none   |  9)    none   | 10)    none
 11)    none   | 12)    none   | 13)    none   | 14)    none   | 15)    none
 16)    none   | 17)    none   | 18)    none   | 19)    none   | 20)    none
 21)    none   | 22)    none   | 23)    none   | 24)    none   | 25)    none
 26)    none   | 27)    none   | 28)    none   | 29)    none   | 30)    none
 31)    none   | 32)    none   | 33)    none   | 34)    none   | 35)    none
 36)    none   | 37)    none   | 38)    none   | 39)    none   | 40)    none
 41)    none   | 42)    none   | 43)    none   | 44)    none   | 45)    none
 46)    none   | 47)    none   | 48)    none   | 49)    none   | 50)    none
 51)    none   | 52)    none   | 53)    none   | 54)    none   | 55)    none
 56)    none   | 57)    none   | 58)    none   | 59)    none   | 60)    none
 61)    none   | 62)    none   | 63)    none   | 64)    none   | 65)    none
 66)    none   | 67)    none   | 68)    none   | 69)    none   | 70)    none
 71)    none   | 72)    none   | 73)    none   | 74)    none   | 75)    none
 76)    none   | 77)    none   | 78)    none   | 79)    none   | 80)    none
 81)    none   | 82)    none   | 83)    none   | 84)    none   | 85)    none
 86)    none   | 87)    none   | 88)    none   | 89)    none   | 90)    none
a) alter entry  n) next  l) last  k) kopy  m) more...  o) load defaults  x)
eXit

                                enter command-
```

"a" Alter Entry:

This command is used to set up the ninety individual entries in each of the ninety different schedules.This command will ask you for the show number you want to play, an d the hours/minutes you want to play it at.

If you enter a show value of zero, then 'whatever is next' will be played at the time you select. If a 'next' show has been set for the last show that played, it will be this

show that plays. Otherwise, it will play the next show numerically.

If you enter zero for show, hour and minute, the entry will be cleared. This means that you can not set a 'whatever is next' show to play at midnight. Any show which is to be played at midnight will have to be specified.

"n" Next Entry:

This command is used to switch to the next schedule's screen.

"l" Last Entry:

This command is used to switch to the last schedule's screen.

"k" Kopy Entry:

This command is used to copy an entire different schedule and put it into the one you are working on. This is used when you have many schedules that are nearly identical.

"m" More.....:

This command allows you to select from the other menus:

1) **Main Menu.** This brings you back to the main menu.
2) **Show Setup.** This will ask you which of the 255 possible shows you want to modify.
3) **String Setup.** This allows you to modify the strings used to control LaserDisk (or DVD)s.
4) **Delay.** This allows you to set how long each of the sixteen possible countdown delays are.
5) **Schedules.** This is where you modify the ninety different possible schedules.
6) **Calendar.** This is where you select which schedule

will be used on any day.

"o" Load Defaults:

This command allows you to reload the default configuration settings shown in the menu above. You can reload just the current schedule, or all of ninety of them.

"r" Download Configuration:

This command is used to store the current configuration as a file on your computer. This file, once saved, can be restored to any 2.00 (or later) Smart Brick Brain by simply sending it back to the Brain. If the serial address of the saved file is different from the current address of the Smart Brick Brain, then you should only load it from within the Smart Brick Brain's configuration mode. Otherwise, the addresses will not match, and the Smart Brick Brain will ignore the file. (Before you exit configuration mode after doing an upload, check and correct the serial address for this Smart Brick Brain on the 'Main' menu).

This command responds with the current contents of the configuration EEprom for this Smart Brick Brain. This string of 89,903 ASCII characters (65,315 for older Smart Brick Brains) is led off by the character string 's5AA5'. As it happens, this is the lead in string for the **LOAD CONFIGURATION** command. This allows you to save the configuration of one or more Smart Brick Brains (or other Smart Bricks and Digital Audio Repeaters) in your computer for later retrieval or archiving, and then simply and easily reload this data at any time. To save the data to the disk of your computer:

1) Invoke this command by hitting 'r' from any configuration screen.

2) Tell your computer to save all ASCII text received from the serial port. It will ask you to give the file that

will be created a name and navigate to where you would like it stored. We try to use the extension of '.brn' for these files. If given the option, tell your computer not to change any carriage returns ('CR') or line feeds ('LF'). Many programs want to do this. Once you have told your computer to start saving any incoming text.....

3) Hit 'any' key to start the download from the Smart Brick Brain.

4) When the download is finished (you will see an extra line feed when it finishes), tell your computer to 'stop' saving ASCII text BEFORE YOU DO ANYTHING ELSE! This closes the file and saves it on your computer.

5) Press 'any' key to redraw the screen and continue.

To upload a previously saved configuration:

1) Tell your computer to send out the file saved from the **Download Configuration** command.

The Rack Brain will report on the success or failure of the configuration upload on the LCD display (if installed) and on the screen of the computer.

If you are having trouble getting good uploads, you can set a 'delay between each character' in your modem program. This will slow the transmission down.

The settings of the Lock Counter/Timer Setup screen are not downloaded or restored by these commands.

"$" enter Keys:

This command allows you to enter the keys to open the lock setup screen, or unlock any lock that has been set. If a key has not yet expired, it will be halted at its current count and will not expire. The Smart Brick Brain will report on any key that is entered, and if the key successfully unlocked or or not.

If the Smart Brick Brain has been locked, then it will ask for a password before allowing you to enter configuration mode. If the password clears the lock, and there are no other locks set, then you will enter configuration after you then hit 'any' key.

"x" eXit Setup Mode:

This command is used to exit the setup mode. It is when you exit that the Smart Brick Brain saves the checksums it uses to determine if the configuration has changed. If you power down the Smart Brick Brain without exiting, the Smart Brick Brain will display a 'CS Error' message each time it boots. To clear this, you must enter configuration and exit again, to allow the checksum to be calculated.

After exiting configuration for the final time, you should move the 'write protect' switch to the 'protected' position. This will prevent any accidental or unauthorized changes in configuration.

If you hit this command in error, hitting an <ESC>ape key will get you back to the setup mode. All of the setup commands which don't take effect immediately, take effect when the eXit command is entered. This includes things like the BAUD RATE, so you will have to change the baud rate of the terminal you are using at this time.

For compatibility with other products which might be on the same RS-422 serial network, this command asks you to enter a 'Y' or 'N'. This lets them know that the setup mode has been exited on this card. If you hit this command by mistake, then you can hit the <ESC>ape key to get back to where you were before.

All other Audio Repeater cards and Smart Brick Brains

in the same serial network have their serial ports disabled while any card in the system is in setup mode. This is the only command to which they will respond. After the initial 'X', all of the other cards wait for a 'Y' or 'N' before they will start accepting other serial commands again. If you find that you are having trouble communicating with any of the cards in the system, try entering an 'XN' to trick it into thinking you have exited the configuration mode.

- Smart Brick Brain Calendar Setup Menu -

This menu is used to set any of the twelve different possible calendars. These are used in combination with the schedule menu to schedule shows up to one year in advance.

```
- Gilderfluke & Co. Rack Smart Brick Brain - rev. 2.00 copyright 1991-2000 DCM
-

                              July Calendar

   1) none |  2) none |  3) none |  4) 90   |  5) none |  6) none |  7) none
   8) none |  9) none | 10) none | 11) none | 12) none | 13) none | 14) none
  15) none | 16) none | 17) none | 18) none | 19) none | 20) none | 21) none
  22) none | 23) none | 24) none | 25) none | 26) none | 27) none | 28) none
  29) none | 30) 30   | 31) none


                           32) Sunday    : 51
                           33) Monday    : 30
                           34) Tuesday   : 30
                           35) Wednesday : 30
                           36) Thursday  : 30
                           37) Friday    : 31
                           38) Saturday  : 52



a) alter entry  n) next  l) last  k) kopy  m) more...  o) load defaults  x)
eXit

                              enter command-
```

For each of the twelve months, you have thirty-one days per month, as well as the seven days of the week. The Rack Smart Brick Brain will first check today's month and day of month. If a schedule is found there, it will be used. If none is found, then the Rack Smart Brick Brain will check for today's day of the week. If it finds a schedule there, it will be used. If not, then there are no preprogrammed shows scheduled for today.

"a" Alter Entry:

This command is used to set up the thirty one individual day and the seven day of the week entries in each

of the twelve different months. This command will ask you for the schedule number you want to use.

"n" Next Entry:

This command is used to switch to the next month's screen.

"l" Last Entry:

This command is used to switch to the last month's screen.

"k" Kopy Entry:

This command is used to copy an entire different calendar and put it into the one you are working on. This is used when you have many calendars that are nearly identical.

"m" More.....:

This command allows you to select from the other menus:

1) **Main Menu.** This brings you back to the main menu.
2) **Show Setup.** This will ask you which of the 255 possible shows you want to modify.
3) **String Setup.** This allows you to modify the strings used to control LaserDisk (or DVD)s.
4) **Delay.** This allows you to set how long each of the sixteen possible countdown delays are.
5) **Schedules.** This is where you modify the ninety different possible schedules.
6) **Calendar.** This is where you select which schedule will be used on any day.

"o" Load Defaults:

This command allows you to reload the default con-

figuration settings shown in the menu above. You can reload just the current calendar, or all of twelve of them.

"r" Download Configuration:

This command is used to store the current configuration as a file on your computer. This file, once saved, can be restored to any 2.00 (or later) Smart Brick Brain by simply sending it back to the Brain. If the serial address of the saved file is different from the current address of the Smart Brick Brain, then you should only load it from within the Smart Brick Brain's configuration mode. Otherwise, the addresses will not match, and the Smart Brick Brain will ignore the file. (Before you exit configuration mode after doing an upload, check and correct the serial address for this Smart Brick Brain on the 'Main' menu).

This command responds with the current contents of the configuration EEprom for this Smart Brick Brain. This string of 89,903 ASCII characters (65,315 for older Smart Brick Brains) is led off by the character string 's5AA5'. As it happens, this is the lead in string for the **LOAD CONFIGURATION** command. This allows you to save the configuration of one or more Smart Brick Brains (or other Smart Bricks and Digital Audio Repeaters) in your computer for later retrieval or archiving, and then simply and easily reload this data at any time. To save the data to the disk of your computer:

1) Invoke this command by hitting 'r' from any configuration screen.

2) Tell your computer to save all ASCII text received from the serial port. It will ask you to give the file that will be created a name and navigate to where you would like it stored. We try to use the extension of '.brn' for these files. If given the option, tell your computer not to change any carriage returns ('CR') or

line feeds ('LF'). Many programs want to do this. Once you have told your computer to start saving any incoming text.....

3) Hit 'any' key to start the download from the Smart Brick Brain.

4) When the download is finished (you will see an extra line feed when it finishes), tell your computer to 'stop' saving ASCII text BEFORE YOU DO ANYTHING ELSE! This closes the file and saves it on your computer.

5) Press 'any' key to redraw the screen and continue.

To upload a previously saved configuration:

1) Tell your computer to send out the file saved from the **Download Configuration** command.

The Rack Brain will report on the success or failure of the configuration upload on the LCD display (if installed) and on the screen of the computer.

If you are having trouble getting good uploads, you can set a 'delay between each character' in your modem program. This will slow the transmission down.

The settings of the Lock Counter/Timer Setup screen are not downloaded or restored by these commands.

"$" enter Keys:

This command allows you to enter the keys to open the lock setup screen, or unlock any lock that has been set. If a key has not yet expired, it will be halted at its current count and will not expire. The Smart Brick Brain will report on any key that is entered, and if the key successfully unlocked or or not.

If the Smart Brick Brain has been locked, then it will ask for a password before allowing you to enter configuration mode. If the password clears the lock, and there are no other locks set, then you will enter configuration after

you then hit 'any' key.

"x" eXit Setup Mode:

This command is used to exit the setup mode. It is when you exit that the Smart Brick Brain saves the checksums it uses to determine if the configuration has changed. If you power down the Smart Brick Brain without exiting, the Smart Brick Brain will display a 'CS Error' message each time it boots. To clear this, you must enter configuration and exit again, to allow the checksum to be calculated.

After exiting configuration for the final time, you should move the 'write protect' switch to the 'protected' position. This will prevent any accidental or unauthorized changes in configuration.

If you hit this command in error, hitting an <ESC>ape key will get you back to the setup mode. All of the setup commands which don't take effect immediately, take effect when the eXit command is entered. This includes things like the BAUD RATE, so you will have to change the baud rate of the terminal you are using at this time.

For compatibility with other products which might be on the same RS-422 serial network, this command asks you to enter a 'Y' or 'N'. This lets them know that the setup mode has been exited on this card. If you hit this command by mistake, then you can hit the <ESC>ape key to get back to where you were before.

All other Audio Repeater cards and Smart Brick Brains in the same serial network have their serial ports disabled while any card in the system is in setup mode. This is the only command to which they will respond. After the initial 'X', all of the other cards wait for a 'Y' or 'N' before they will

start accepting other serial commands again. If you find that you are having trouble communicating with any of the cards in the system, try entering an 'XN' to trick it into thinking you have exited the configuration mode.

- Brick Brain Lock Counter/Timer Setup -

This menu is used to set any of the sixteen different possible Lock Counter/Timers. These are used to lock up a system after a certain number of shows play, after a certain number of hours or minutes, or after an unauthorized person has modified the configuration of the Smart Brick Brain. This screen is also where you reset the counters that keep track of the number of shows that have been played.

```
- Gilderfluke & Co. Rack Smart Brick Brain - rev. 2.00 copyright 1991-2000 DCM -

                              Lock Counter/Timer Setup
     types     date    count   key to clear   message line 1    message line 2
0) ......... ........ ........ '..........' '................''................'
1) EXPIRED b 09/10/00 _______0 'Password__' '______I_Am______''____Expired_____'
2) ......... ........ ........ '..........' '................''................'
3) each hour 09/13/00 16777215 'hour______' '______Hour______''____Deadman_____'
4) ......... ........ ........ '..........' '................''................'
5) ......... ........ ........ '..........' '................''................'
6) cleared a 00/10/00 12345678 'Guess_What' '______I_Am______''__User Cleared__'
7) ......... ........ ........ '..........' '................''................'
8) any show  09/13/00 _____646 '123456____' '__Any_Show_(8)__''__123456_=_key__'
9) configure 00/10/00 _______0 'do_config.' '________________''________________'
A) ......... ........ ........ '..........' '................''................'
B) each min. 09/13/00 12341148 'minute____' '_____Minute_____''____Deadman_____'
C) ......... ........ ........ '..........' '................''................'
D) tampering 09/15/00 ____8795 'tampering_' '___Tampering____''_DeadBeat_Timer_'
E) ......... ........ ........ '..........' '................''................'
F) show 255  09/13/00 ___46072 'Hi_Mom!___' '__I_am_tired_of_''this damned show'
     p) password to this screen- 'DCM_____________'  k) clear show counters
     m) more...    o) load defaults    r) download configuration    x) eXit

                                   enter command-
```

Lock Counter/Timers can be used to assure payments arrive in a timely manner, or that a show is serviced when scheduled. When any Lock Counter/Timer expires, the Smart Brick Brain will lock up. The strings you have entered for that Lock Counter/Timer will be displayed on the front of the Smart Brick Brain, and the heartbeat rate will speed up to indicate that it is locked up (this is for Smart Brick Brains that don't have LCD displays). Once a Smart Brick Brain has locked up, you can not enter configuration without entering the key(s) that clear any Lock Counter/Timers that

have expired.

Any Lock Counter/Timer can be cleared before it has expired by entering the key for that timer from the "$" command. This command is available from all configuration screens. Once User Cleared, the count will be frozen and that timer will not expire in the future.

To keep track of when the timers have been set, cleared, or expired, the time and date is recorded when any major event happens on the a timer. Redrawing the screen toggles between displaying the time and date. The options for the Lock Counter/Timers are:

a) Decrement on any show that plays. This type of counter will decrement even if the same show which is starting is also used for any other type of counter. Since this type of timer is decremented on show starts, once any counter has expired, it will not be decremented until it is cleared.

b**) Decrement when a specific show plays.** This type of counter will decrement even if the same show which is starting is also used for any other type of counter. Since this type of timer is decremented on show starts, once any counter has expired, it will not be decremented until it is cleared.

c) Decrement on each minute the Smart Brick Brain is powered up. This is completely separate from the Real Time Clock on the Smart Brick Brain, and is unaffected by changing the time, or even completely removing the RTC chip. To discourage resetting the Smart Brick Brain to attempt to defeat the minute counter, each time the Smart Brick Brain powers up, a minute is decremented. Because this counter is time based, it will continue to tick away even after another Lock Counter/Timer has expired.

d) **Decrement on each hour the Smart Brick Brain is powered up.** This is completely separate from the Real Time Clock on the Smart Brick Brain, and is unaffected by changing the time, or even completely removing the RTC chip. To discourage resetting the Smart Brick Brain to attempt to defeat the hour counter, each time the Smart Brick Brain powers up, a hour is decremented. Because this counter is time based, it will continue to tick away even after another Lock Counter/Timer has expired.

e) **Tampering.** This counter will decrement on each show start after the Smart Brick Brain senses that there has been an attempt to change its configuration. The only settings that is allowed to be changed are the time on the RTC and the settings on this screen. Any other change will trigger the tampering sensor. This is shown by the word 'tampering' being printed in upper case letters ('TAMPERING') on this screen. If the card is write protected, then the tampering sensor will not be triggered by attempts to change the configuration. Once the tampering sensor has been triggered, it can only be stopped by clearing the counter or changing the settings for the counter from this screen. Because the tampering counter decrements on each show start, you can set it to expire on the first show that plays (by setting the counter to zero), or after some number of shows. This can be used to really mess with the mind of the potential tamperer.

f) **Lock Configuration.** This is a counter that doesn't actually decrement. If it is set, then a password will be required to enter configuration mode, even if no Lock Counter/Timers have expired. This keeps unauthorized users from tampering with the Smart Brick Brain configuration.

The settings for the Lock Counter/Timers are stored in a separate EEprom. replacing it will immediately lock up the system (A 'Dead Beef' error will be displayed on the LCD). If a tampering counter has been set, changing the main configuration EEprom without also moving the Lock Counter/Timers EEprom will cause the tampering sensor to be triggered. Changing, or even completely removing the real time clock chip will have no effect upon the Lock Counter/Timers.

The counters all will expire as the decrement to a negative value. If you set a counter to a value of zero, it will take one count until it expires. If you set it to ten, it will take eleven counts before it expires. Expired counters are displayed with zero values. Although you can enter values up to 16,777,215, You should keep the settings below one million. This is the guaranteed lifespan for rewriting the EEprom. Values beyond this may wear out the EEprom before they expire. One million minutes is approximately two years. One million hours is equivalent to about 114 years. A letter follows expired/cleared Lock Counter/Timers to show what type of timer it was prior to being cleared/expired.

The password to enter this screen defaults to "DCM", followed by a <return>. The password can be changed to any combination of from one up to sixteen alphanumeric characters. If you have changed this password and forget what you changed it to, you will need to return the Smart Brick Brain to Gilderfluke & Company so that we can temporarily install firmware to allow us to access this screen [1]. Since most end users will have access to this manual, we strongly suggest you do change it to something else and keep a good record of what it was changed to. Since employees often change over time, do not entrust this information to the keeping of a single employee. Companies that install large numbers of systems may want to standardize on a single password for all Smart Brick Brains so that their field service peo-

[1] This is not a warranty repair. The customer will be responsible for shipping and labor charges.

ple aren't scrambling to find different passwords.

Keys to clear individual Lock Counter/Timer can be any combination of from one up to ten alphanumeric characters. If you don't enter a password for an individual Lock Counter/Timer, you will not be able to clear it except from this screen. This means that your end users, who presumably won't have access to this screen, will not be able to clear it themselves.

All of the password entries are case sensitive, and can include spaces, numbers, punctuation marks, and most non-printing characters (tabs, bells, etc.). The Smart Brick Brain will accept any characters you can type, with the exceptions of the <Escape>, <Delete> and <Return> keys, which it needs to use as you are entering stuff. Non-printing characters will be displayed as '?'s on the screen.

You can use the same tricks you use on the Internet to make your passwords harder to guess. Examples of these are replacing letters with similar numbers (i.e.: the letter 'o' is replaced by the number '0') or using reversing the normal capitalization of wORDS. Don't use the word 'password' as this is most hackers first guess. The second guess will probably be your company's name.

The strings you enter for each password are displayed on the LCD screen on the front of the Smart Brick Brain once a password has expired. You can use the strings to remind you what lock is that has expired. Although you can enter non-printing characters, the LCD will simply ignore most of them. If you don't like the way the Smart Brick Brain 'centers' the text you have entered, then you can use 'spaces' to center how ever you would prefer.

Once expired, passwords must be entered to unlock the Smart Brick Brain. Passwords can be cleared before they expire, and will then never expire. Clearing passwords requires that the end user be able to plug in a computer to the Smart Brick Brain and has an appropriate modem program and cable to do so.

Alternatively, the Smart Brick System can be set up to be cleared over a modem line or through the internet using the appropriate modem and software.

The 'clear show counters' command is used to clear the count of shows that have run on the Smart Brick Brain. The counts are displayed from the main configuration screen using the 'Print Show Counters' command. They can be used to track the popularity of different shows, or to keep records for billing on shows where the client must pay a fee for each run. The latter is occasionally found on motion base attractions, where there is a copyright license on the film. These counters are not automatically cleared when you reload defaults for this menu. You must specifically clear them.

- Smart Brick MiniBrain -

The Smart Brick MiniBrain is a smaller version of our other Smart Brick Brains. As with all Smart Brick Brains, it can be used to control any number of Smart Bricks via a Smart Brick Network. It can be used when you need to run Smart Bricks, Analog Smart Bricks, or Electronic FeedBack (EFB) Smart Bricks in an installation which doesn't need to be synchronized to an external time code and/or doesn't need direct random access to multiple shows.

The Smart Brick MiniBrain can be used to control shows of up to one MByte in length. This translates into a show capacity of almost ten hours at thirty frames (updates) per second. The MiniBrain can divide the memory equally into two separate shows. These can be selected by an external input.

The MiniBrain is a small (2" x 2-3/4") circuit board. Holes (.156" dia.) at each corner allow it to be mounted on screw standoffs or it can be snapped into Augat 2-3/4" Snap Track:

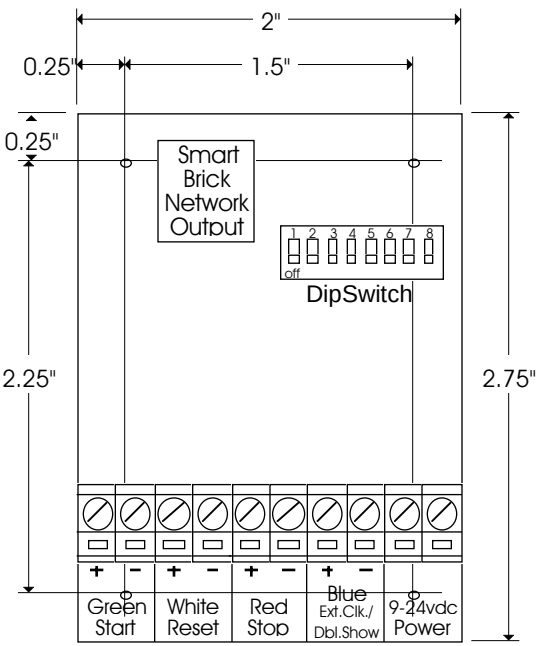

The only indicator on the MiniBrain is the Heartbeat LED that shows that it is alive. It flashes at twice the normal rate when running a show. A Heads Up Display can be used if you need to see to see the location in the show. This will display the current time into the show.

There are four opto-isolated inputs on each MiniBrain. Any input can be triggered by applying a DC voltage between twelve and twenty-four volts to these screw terminals. The first three of these inputs are dedicated for starting, stopping, and resetting the MiniBrain. The fourth input can be used for either clocking the MiniBrain externally or selecting between two shows. The dipswitches determine the function of this input.

The inputs can be used in various combinations. If you want to always start the show from the beginning, you can wire the Start and Reset inputs in parallel. In this way the MiniBrain will always start at the beginning. If you want the MiniBrain to reset when a show is stopped, then you wire the Stop and Reset inputs together.

If you need to stop or reset a show at a time before the end of the memory is reached, then you can program one or more digital bits on a Smart Brick and feed these output(s) into the appropriate MiniBrain input(s). In this way you can divide the memory into as many small 'sub-shows' as you wish, or you can set a loop point at at any point in the memory. If dividing the memory into multiple shows, the shows are accessed sequentially. When one show plays it ends at the start of the memory used by the next show. The MiniBrain then sits and waits for the next Start input before playing the next show. Note that the Smart Brick used to feed bits into the MiniBrain must not be configured to disable its outputs when stopped. The bit which stopped and/or reset the MiniBrain will go active again as soon as the next show is started and immediately re-stop/reset the MiniBrain.

If the inputs are to be enabled or disabled at different times

during a show, a momentary button can be wired in series with a digital output from a Smart Brick and then into the inputs of the MiniBrain. This allows you to do things like disable starts/stops/resets while a show is playing by just not programming that bit during the show.

The power applied to the MiniBrain can be any voltage between 9 and 24 VDC. The MiniBrain is polarity protected, so you connect either supply lead to either screw terminal.

All configuration for the MiniBrain is done on an eight position dipswitch. These are used as follows:

Switch #1: Brick Memory Size:

Switch #2: Brick Memory Size:

Switch #3: Brick Memory Size:

These three switches determine the size of the memory that the MiniBrain thinks the Smart Bricks have installed. The MiniBrain will always reset to the first frame each time the end of memory is reached. Unless the 'Run Continuous' switch is ON, the MiniBrain will also stop running when the end of memory is reached. If you don't need to use all of the memory installed on the Smart Bricks you can lie about the size of the memory installed. Setting these switches to a lower value will have NO adverse effect on the Smart Bricks. The size of the memory and the length of the shows at the supported frame rates are as follows. All times are rounded to the nearest whole second:

Sw #1	Sw #2	Sw #3	Memory Size	@15 FPS	@16 FPS	@30 FPS	@32 FPS
OFF	OFF	OFF	8192	9:06	8:32	4:33	4:16
ON	OFF	OFF	16,384	18:12	17:04	9:06	8:32
OFF	ON	OFF	32,768	36:24	34:08	18:12	17:04
ON	ON	OFF	65,536	1:12:49	1:08:16	36:24	34:08
OFF	OFF	ON	131,072	2:25:38	2:16:32	1:12:49	1:08:16
ON	OFF	ON	262,144	4:51:16	4:33:04	2:25:38	2:16:32
OFF	ON	ON	524,288	9:42:32	9:06:08	4:51:16	4:33:04
ON	ON	ON	1,048,576	19:25:05	18:12:16	9:42:32	9:06:08

Switch #4: Double Show:

When this switch is turned on, the MiniBrain will divide the installed memory on the Smart Bricks into two separate 'shows'. Which show is being played is selected using the 'Blue' input. When this input is active, the second bank is selected. When this option is selected, you can not also clock the MiniBrain externally. Both these functions use the Blue input. The capacities of each show will be as follows when switch #4 is ON:

Sw #1	Sw #2	Sw #3	Each Show	@15 FPS	@16 FPS	@30 FPS	@32 FPS
OFF	OFF	OFF	4096	4:33	4:16	2:16	2:08
ON	OFF	OFF	8192	9:06	8:32	4:33	4:16
OFF	ON	OFF	16,384	18:12	17:04	9:06	8:32
ON	ON	OFF	32,768	36:24	34:08	18:12	17:04
OFF	OFF	ON	65,536	1:12:49	1:08:16	36:24	34:08
ON	OFF	ON	131,072	2:25:38	2:16:32	1:12:49	1:08:16
OFF	ON	ON	262,144	4:51:16	4:33:04	2:25:38	2:16:32
ON	ON	ON	524,288	9:42:32	9:06:08	4:51:16	4:33:04

Switch #5: Frame Rate:

Switch #6: Frame Rate:

These two switches are used to select the frame rate being used by the MiniBrain. They are used as follows:

Sw #4	Sw #5	Switch #6	Frame rate
OFF or ON	OFF	OFF	15 FPS
OFF or ON	ON	OFF	16 FPS
OFF or ON	OFF	ON	30 FPS
OFF	ON	ON	External Clock through Blue Input
ON	ON	ON	32 FPS

The thirty-two FPS frame rate is unavailable unless the card is using the Blue input for selecting a second show. When external clock is selected, the frames displayed on a heads up display will carry into the seconds every thirty frames, no matter what rate the frames are actually arriving at the MiniBrain.

SWITCH #7: STOP ON GREEN OPENING:

When this switch is turned on, the MiniBrain will stop when the Green input is opened. This switch is used when you would like the show to run AS LONG as the Green input is closed. The MiniBrain will start playing when the Green input is activated, and stop when the Green input is deactivated.

SWITCH #8: RUN CONTINUOUS

This switch works in parallel with the Green input. When it is ON, the MiniBrain will start playing. At the end of a show, the MiniBrain will reset back to the first frame and continue playing from the beginning of the show. This switch can be used to start a show playing, or if it is left ON the MiniBrain will start playing as soon as power is applied and will loop at the end of the show. Note that when this switch is left ON, the Green input is disabled.

If this is a blank page, it should be on the sinister side

- Heads Up Display -

Heads-up-displays are available in two different styles:

1) 19" rack-mount.
2) Stand-alone.

The stand-alone model has a larger display than the 19" rack mount version. The rack-mount version fits into one 1-3/4" space in a 19" rack. Any number of Heads Up Displays can be attached to the Smart Brick system by simply plugging them into the wire which runs to all of the Smart Bricks from the Smart Brick Brain and plugging the power supply into a wall outlet. The display of the stand alone version front looks like this

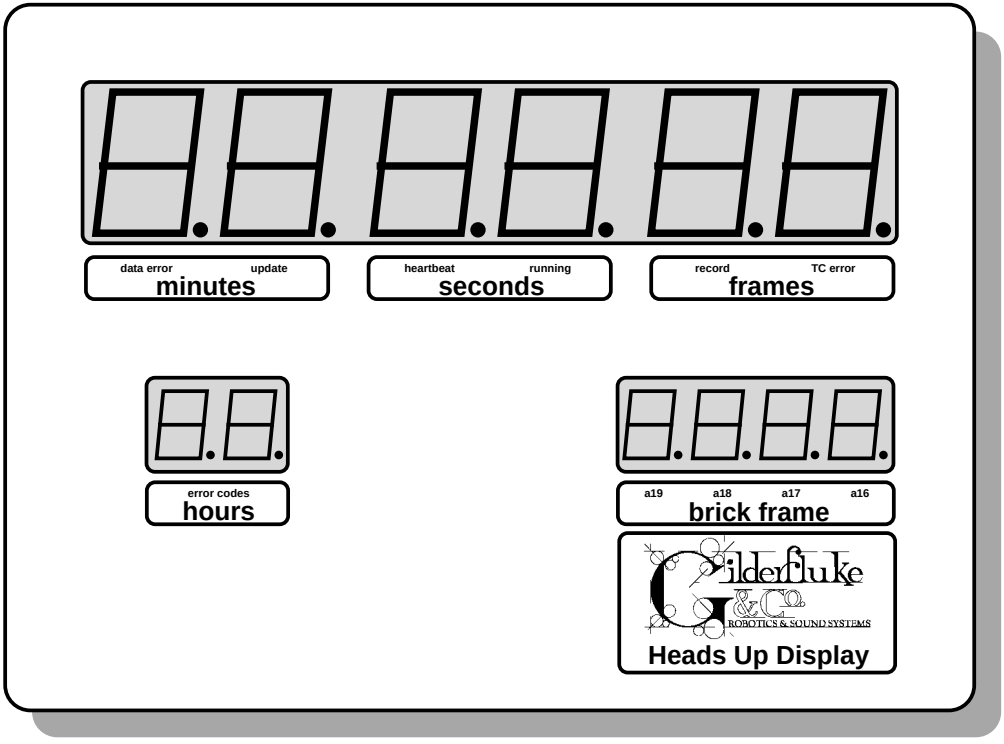

The data displayed by the Heads Up Display changes slightly, depending on the time code being used. For all time bases except for LaserDisk, the 'Minutes/Seconds/Frames' show exactly

what you would expect for the show being played, with the 'Hours' showing the current show number. In LaserDisk shows, the display shows the actual LaserDisk frame number right from the LaserDisk player. While running shows, the 'Hours' always shows the number of the show being played. The 'Smart Brick frame number' shows the actual address being accessed in all of the Smart Bricks.

During the countdown between shows, the 'hours/minutes/seconds' show the countdown time until the next show is played. The 'Frames' aren't used during countdowns.

General error and status conditions are displayed in the 'Hours' display in the front of the Heads Up Display. The meanings of these Error Messages are as follows:

E1: Brick Overflow: This indicates that the frame number requested is beyond the end of the memory installed in the Smart Bricks attached to the system. Dipswitch number 5 must have been set to tell the Smart Brick Brain how big the Smart Bricks are for this function to work properly.

E2: Smpte Time Code Error: This is displayed when the Smart Brick Brain has started listening for a Smpte time code, and the 'Smpte Hour' byte of the incoming time code identified a show which wasn't a Smpte time code show.

E3: End Of Show: This is not really an error condition, it just shows that the end of the show being played has been found

E4: String Error: This error condition is displayed when the string being sent requested a specific ASCII character to be returned by whatever is connected to the serial port, and a different character was returned.

E5: Invalid Frame Rate: This error condition is displayed when the frame rate set in the system is not valid for the

time code of the show which is being started. An example of this would be if the frame rate were set to sixteen frames per second and a Smpte time code is being used. As this is not a valid frame rate for a Smpte show, an 'E5' would be displayed.

E6: LaserStart Error: This is displayed when an attempt is made to start a LaserDisk (or DVD) show by sending it a 'search for frame number command'. After a number of tries (which can be set from one to two hundred fifty-six in the configuration of the Smart Brick Brain), the Smart Brick Brain will then try to start up the LaserDisk (or DVD) player (see 'F2' below).

E7: LaserLoop Error: This is displayed when an error is made in the response received from a LaserDisk (or DVD) player while it is running a LaserDisk (or DVD) show.

E8: Start Error: The only time this error is displayed is when the time code is asking for a show frame number which is actually before the first frame of the show being played. About the only way of getting the system into this condition is to use the manual controls on the front of the LaserDisk (or DVD) player to manually 'rewind' the show to a frame number before the start of the show.

E9: Response Error: This error is displayed when a string being sent at the start or end of a show has requested a character to be returned by whatever is attached to the serial port, and nothing has been returned within about 45 seconds. About the only time you will see this error is when the LaserDisk (or DVD) player is actually turned off when an attempt is made to start a LaserDisk (or DVD) clocked show.

EA: Call Home: If this error message ever appears in the 'hour' display, you should call the vendor who installed your show.

F1: Sending String: This code indicates that a string is being sent at the start or end of a show. When this code is displayed, the 'Minutes' will be showing the string number being sent out, the 'Seconds' showing the entry number in the string which is being sent out, and the 'Frames' showing what the entry is which is being sent. Normally this flashes by so fast that you can't read it, but is useful when there is a holdup of some sort in the string. Typical of these is if the LaserDisk (or DVD) doesn't' respond to a command as expected, or when you have put an entry in the string which causes the Smart Brick Brain to wait for a switch closure to come in on one of it's inputs.

F2: Starting LaserDisk (or DVD): After the Smart Brick Brain has tried telling the LaserDisk (or DVD) player to search for the starting frame of the show for the number of times set in the configuration (an 'E6' is displayed while it is doing this), the Smart Brick Brain will send a 'start-up' sequence of commands to try to tell the LaserDisk (or DVD) player to close the door and spin up the disk.

The decimal points on the 'Minutes/Seconds/Frames' display are used to show a variety of conditions in the Smart Brick System:

Data Error: This light will flash when the Heads Up Display receives a bad packet of data from the Smart Brick Brain. You should almost never see this one flash. If you do, it means that there is something wrong with the connection between the Smart Brick Brain and the Heads Up Display, and by implication, that the data getting to the Smart Bricks is also suspect.

Display Update: This flashes every time the Smart Brick Brain updates the entire system. If it is not flashing, then there is definitely something wrong with the connection between the Smart Brick Brain and the Heads Up Display, and by implication, that the data getting to the Smart Bricks is also suspect.

Heartbeat: This should flash in exact synchronization with the 'Heart' on the front of the Smart Brick Brain. If it doesn't, or if it flashes irregularly, then there is probably something wrong with the connection between the Smart Brick Brain and the Heads Up Display, and by implication, that the data getting to the Smart Bricks is also suspect.

Advancing Frames: This is lit whenever the Smart Brick System is advancing frames. If any of the Smart Bricks in the system are configured to 'disable the outputs when stopped', they will only have their outputs enabled when this LED is lit. The number of 'heartbeats' that this LED will stay on after the system stops running a show can be set when configuring the Smart Brick Brain to anywhere from one to two hundred fifty-six beats.

Global Record: This LED is lit only when Dipswitch #6 in the Smart Brick Brain is 'ON' to enable recording on the Smart Bricks and the system is advancing frames. When this LED is off, it shows you that the reason the record LEDs on

the Smart Bricks won't turn on is that you haven't enabled them in the Smart Brick Brain.

Time Code Error: This LED will flash whenever the Smart Brick Brain is correcting an error in the incoming time code. If it flashes too often, then there is a problem with the connection to the Smpte source, or the level of the Smpte getting to the Smart Brick Brain is either too high or too low. Occasional errors in Smpte time code aren't all that unusual, so don't be alarmed it this LED flashes occasionally. This indicates that the Smart Brick Brain is doing it's job, and has detected and corrected an error. Generally these errors represent a glitch in the time code as it is recorded on the tape (or whatever medium is being used as the source for the Smpte time code), and so will occur at the exact same instant in the show every time it is played.

- Start and End Strings -

STRINGS are the names of the list of commands which you can tell the Smart Brick Brain send at the start or end of any show. They are used primarily to talk to LaserDisk (or DVD) players, although they can be used with any type of show to send and receive characters through the serial port, turn on the tape deck control outputs, or cause the Smart Brick Brain to wait until it gets a switch closure on one of it's inputs before continuing. They can also be used to send commands through the serial port to any other piece of show equipment that needs a serial input, or even just to print on a monitoring screen that a show has started or ended.

On the **Show and String Setup** menu, there are nine strings shown, each of which can hold up to twelve characters. If longer strings are needed, you just omit the special character which tells the Smart Brick Brain that it has found the end of a string, and it will continue sending the next string, and the next, and the next, until it finds an 'end-o-string' special character or the last character of string 9. This is the only way to send the last two strings, as they can not be accessed directly as the first seven strings can.

Characters are entered into the strings as HEXadecimal ASCII characters. As an example of the using ASCII:

To send a letter "a", you enter the HEXadecimal value of 61.

If bit seven of any ASCII character is set to =1, then instead of sending the character out the serial port, the Smart Brick Brain will wait until it receives this character through the serial port. As an example of using ASCII to receive a character:

To wait until the Smart Brick Brain receives a letter "a", you enter a value of E1.

The Smart Brick Brain has a limited supply of patience when waiting for a character to be returned from the serial port. If it

hasn't heard anything within about 45 seconds, it will turn on the 'E9' error message on the Heads Up Displays.

When displayed on the STRING SETUP MENU, characters that the Brick will wait for are displayed in parenthesis and have their bit seven hidden. For this reason in the example above, although entered as '**E1**', this entry would be displayed as '**(61)**'.

SPECIAL STRING CHARACTERS:

Within the strings there are eleven 'special characters' which can be used. They are defined as follows:

End-O-String: (00): This special character tells the Smart Brick Brain that it has reached the end of the current string it is sending.

LaserSearch: (01): This character, when found by the Smart Brick Brain in a string, causes it to send out a search command to the LaserDisk (or DVD) player to find the frame number found in the LaserDisk Start for the current show.

PB: (02): When found in a string, this character causes the Smart Brick Brain just to sit and wait until it gets an input on the manual PB input. Be sure that there are no conflicting commands which this input may trigger when you activate it. (An example of this would be to have a command to wait for this input during a start string, and then have this input also stop any show when it is triggered. This would have the unfortunate effect of stopping the show before it has even started. This command is not available on Rack Smart Brick Brains when using Panasonic LaserDisk Players.

Blue: (03): When found in a string, this character causes the Smart Brick Brain just to sit and wait until it gets an input on the BLUE input. Be sure that there are no conflict-

ing commands which this input may trigger when you activate it. (An example of this would be to have a command to wait for this input during a start string, and then have this input also stop any show when it is triggered. This would have the unfortunate effect of stopping the show before it has even started. This command is not available on Rack Smart Brick Brains when using Panasonic LaserDisk Players.

Green:(04): When found in a string, this character causes the Smart Brick Brain just to sit and wait until it gets an input on the GREEN input. Be sure that there are no conflicting commands which this input may trigger when you activate it. (An example of this would be to have a command to wait for this input during a start string, and then have this input also stop any show when it is triggered. This would have the unfortunate effect of stopping the show before it has even started.

Stop: (05): When found in a string, this character causes the Smart Brick Brain to close the STOP relay output. It will then reopen at a later time as set by the TAPE DECK PULSE setting. When running a tape deck from the Smart Brick System, this would normally be used to stop the tape deck at the end of each show.

Play: (06): When found in a string, this character causes the Smart Brick Brain to close the PLAY relay output. It will then reopen at a later time as set by the TAPE DECK PULSE setting. When running a tape deck from the Smart Brick System, this would normally be used to start the tape deck at the beginning of each show.

Rewind: (07): When found in a string, this character causes the Smart Brick Brain to close the REWIND relay output. It will then reopen at a later time as set by the TAPE DECK PULSE setting. When running a tape deck

from the Smart Brick System, this would normally be used to rewind the tape deck at the end of the last show on the tape.

LaserSearch for CLV LaserDisks (or DVD)s: (08): (Rack Smart Brick Brain only!) When found in a string, causes it to send out a search command to the LaserDisk (or DVD) player to find the frame number found in the LaserDisk Start for the current show. This command is for use with CLV players only. These use 'time' references rather than 'frame' numbers to access the disk, and can hold up to one hour worth of data.

LaserSearch for CLV LaserDisks (or DVD)s: (09): (Rack Smart Brick Brain only!) As above, but searches for hour one, rather than hour zero.

Don't Care: (80h): This character is used when you need to get an ASCII character returned from the serial port, but just don't give a damn what it is that you receive. The Smart Brick Brain will simply wait until it gets <u>any</u> character through the serial port. This is the only one of the 'special characters' which is used when receiving characters from the serial port.

The strings are up to twelve characters long. The first seven can be accessed directly at the start or end of any show. All the characters in a string will be sent until a '00' is encountered in the string. If no '00' is found, they will simply fall through to the start of the next string and start sending it as well. This allows you to send long strings made of of several of the individual strings, or to access the last two strings. As an example of this:

If you needed to send a string thirty characters long, you could start by using string seven for the first twelve characters, and then string eight for the next twelve characters, while the last six characters would be found in string nine.

ASCII Characters to be Sent Out:

When sending ASCII characters to the serial port, they translate into HEXadecimal as follows. The first eight characters are special characters unique to the Smart Brick System:

SENT ASCII	HEX	SENT ASCII	HEX	SENT ASCII	HEX	SENT ASCII	HEX
end-o-string	00h	DLE	10h	SPACE	20h	0	30h
LaserSearch	01h	DC1	11h	!	21h	1	31h
pb	02h	DC2	12h	"	22h	2	32h
blue	03h	DC3	13h	#	23h	3	33h
green	04h	DC4	14h	$	24h	4	34h
stop	05h	NAK	15h	%	25h	5	35h
play	06h	SYN	16h	&	26h	6	36h
rewind	07h	ETB	17h	`	27h	7	37h
CLV Search	08h	CAN	18h	(	28h	8	38h
CLV Search	09h	EM	19h	)	29h	9	39h
LF	0Ah	SUB	1Ah	*	2Ah	:	3Ah
VT	0Bh	ESC	1Bh	+	2Bh	;	3Bh
FF	0Ch	FS	1Ch	,	2Ch	<	3Ch
CR	0Dh	GS	1Dh	-	2Dh	=	3Dh
SO	0Eh	RS	1Eh	.	2Eh	>	3Eh
SI	0Fh	VS	1Fh	/	2Fh	?	3Fh

SENT ASCII	HEX	SENT ASCII	HEX	SENT ASCII	HEX	SENT ASCII	HEX
@	40h	P	50h	`	60h	p	70h
A	41h	Q	51h	a	61h	q	71h
B	42h	R	52h	b	62h	r	72h
C	43h	S	53h	c	63h	s	73h
D	44h	T	54h	d	64h	t	74h
E	45h	U	55h	e	65h	u	75h
F	46h	V	56h	f	66h	v	76h
G	47h	W	57h	g	67h	w	77h
H	48h	X	58h	h	68h	x	78h
I	49h	Y	59h	i	69h	y	79h
J	4Ah	Z	5Ah	j	6Ah	z	7Ah
K	4Bh	[	5Bh	k	6Bh	{	7Bh
L	4Ch	\	5Ch	l	6Ch	|	7Ch
M	4Dh	]	5Dh	m	6Dh	}	7Dh
N	4Eh	^	5Eh	n	6Eh	~	7Eh
O	4Fh	_	5Fh	o	6Fh	del	7Fh

ASCII Characters to be Received:

If you need to get a response from the serial port, you simply enter the character with bit seven set. These characters will be displayed on the menu with parentheses around them and bit seven hidden to show that they are response characters rather than ones which will be sent. The first character is a special character unique to the Smart Brick System. Response ASCII characters translate into HEX as follows:

ASCII	HEX	ASCII	HEX	ASCII	HEX	ASCII	HEX
don't care	80h	DLE	90h	SPACE	A0h	0	B0h
SOH	81h	DC1	91h	!	A1h	1	B1h
STX	82h	DC2	92h	"	A2h	2	B2h
ETX	83h	DC3	93h	#	A3h	3	B3h
EOT	84h	DC4	94h	$	A4h	4	B4h
ENG	85h	NAK	95h	%	A5h	5	B5h
ACK	86h	SYN	96h	&	A6h	6	B6h
BELL	87h	ETB	97h	`	A7h	7	B7h
BS	88h	CAN	98h	(	A8h	8	B8h
HT	89h	EM	99h	)	A9h	9	B9h
LF	8Ah	SUB	9Ah	*	AAh	:	BAh
VT	8Bh	ESC	9Bhh	+	ABh	;	BBh
FF	8Ch	FS	9Ch	,	ACh	<	BCh
CR	8Dh	GS	9Dh	-	ADh	=	BDh
SO	8Eh	RS	9Eh	.	AEh	>	BEh
SI	8Fh	VS	9Fh	/	AFh	?	BFh

ASCII	HEX	ASCII	HEX	ASCII	HEX	ASCII	HEX
@	C0h	P	D0h	`	E0h	p	F0h
A	C1h	Q	D1h	a	E1h	q	F1h
B	C2h	R	D2h	b	E2h	r	F2h
C	C3h	S	D3h	c	E3h	s	F3h
D	C4h	T	D4h	d	E4h	t	F4h
E	C5h	U	D5h	e	E5h	u	F5h
F	C6h	V	D6h	f	E6h	v	F6h
G	C7h	W	D7h	g	E7h	w	F7h
H	C8h	X	D8h	h	E8h	x	F8h
I	C9h	Y	D9h	i	E9h	y	F9h
J	CAh	Z	DAh	j	EAh	z	FAh
K	CBh	[	DBh	k	EBh	{	FBh
L	CCh	\	DCh	l	ECh	|	FCh
M	CDh	]	DDh	m	EDh	}	FDh

N	CEh	^	DEh	n	EEh	~	FEh
O	CFh	_	DFh	o	EFh	del	FFh

Blankness is a state of mind.

- PIONEER LaserDisk (or DVD) Commands -

The Pioneer LaserDisk and DVD players all share a common command format. A full description of the commands can be found in the technical publications available from Pioneer Communications of America. They can be reached at (408) 988-1702.

LaserDisks used with the Standard Smart Brick Brain must be recorded in the CAV format. This allows up to 1/2 hour per side. The Rack Smart Brick Brain supports both CAV and CLV format disks. CLV disks can hold up to one hour per side. Not all players will support the commands needed for using CLV disks in an animation control system. The player must be able to position the disk to a frame (and pause on that frame if it is to be used in a multiple LaserDisk (or DVD) installation).

The LaserDisk (or DVD) player must be configured for 9600 baud, eight bit data, and one stop bit (4800 baud can also work in some applications). On the LD-V8000, you also must set the 'TxD Terminator' to '<C/R>'. Other data rates can be used, but lower baud rates can't get the data across fast enough for the Smart Brick Brain while a show is running. Whatever the data rate used, you must set the Smart Brick Brain, LaserDisk (or DVD) player, and the terminal or computer you are using to configure the system to the same speed. If parity is used, then you need to set the data word length to 7 bits, and the parity to 'odd'. You must also set the Smart Brick Brain to recognize 'odd' parity as well. Connections are made as follows:

Pioneer LaserDisk (or DVD)

DB-15	SIGNAL	SIGNAL FROM/TO Smart Brick Brain
2	DATA OUT	- serial data in to Smart Brick Brain (GREEN)
3	DATA IN	- serial data out from Brick Brain (BLACK)
1, 11 or 15	GROUND	signal ground (BLUE or WHITE)

The electrical output from PC·MACs is at RS-422 voltage levels rather than the RS-232 that these LaserDisk (or DVD) players really want to see. If this causes a problem, or it the wire runs between

PC·MACs and the LaserDisk (or DVD) player are long, then you may want to add a RS-232 to RS-422 converter to the LaserDisk (or DVD) player.

In general, you send a command to the LaserDisk (or DVD) player as two ASCII characters (with occasional variables), followed by a <carriage return> character (0D). The LaserDisk (or DVD) player will then respond when it has completed the task with a upper case 'R' followed by a <carriage return> character (0D). A number of different commands can be stacked together and then followed by a single <carriage return> character (0D) to get them all rolling. The LaserDisk (or DVD) player will go through all of these commands in the order they were entered and then return a 'R' followed by a <carriage return> character (0D) when it has finished the last command. This can save a lot of string space if you are sending complicated strings to the LaserDisk (or DVD) player.

The majority of commands which you might need to use are all pretty simple two or three character ones. The one complicated 'search' command is handled transparently to you when you insert a LaserSearch (01) character in the string being sent to the LaserDisk (or DVD) player (the Smart Brick Brain must be told it is running a Pioneer player in the configuration screen). This string only performs a search for the starting frame of the show on the LaserDisk (or DVD) player. For this reason it is normally followed by a 'PL' (play) command in the same string.

A typical start string for a LaserDisk (or DVD) show is:

LaserSearch PL <CR> (R) (<CR>) end-o-string

Translated into HEX ASCII, this string becomes (this is what you would enter)

01 50 4C 0D D2 8D 00

and it would be displayed on the String Setup Menu as:

01 50 4C 0D (52) (0D) 00

Notice that after the LaserSearch command we have to then tell the LaserDisk (or DVD) to start playing, and that this command is followed by one <carriage return> character to be sent out. Following this we tell the Smart Brick Brain to wait until it gets first an 'R', and then a <CR> back from the LaserDisk (or DVD) player. After this we have a '00' to tell the Smart Brick Brain that it has found the end of the string.

A typical end string for a LaserDisk (or DVD) show is:

ST <CR> (R) (<CR>) end-o-string

Translated into HEX ASCII, this string becomes (this is what you would enter):

53 54 0D D2 8D 00

and it would be displayed on the String Setup Menu as:

53 54 0D (52) (0D) 00

The format of this string is pretty much like that of the startup string, except that there is no need to send the LaserSearch string as was done at the beginning of the show, and the PL command has been replaced by a ST (still frame) command for the LaserDisk (or DVD) player. This freezes the image to whatever the last image on the video disk was. Other commands are available for blanking out the video, ejecting the disk, or a variety of other things. You can even build up a string which will tell the LaserDisk (or DVD) player to search for another frame on the disk and freeze or start playing from that frame. If no command is given to the LaserDisk (or DVD) player at the end of a LaserDisk (or DVD) show, then the player will continue playing along until the end of the disk is reached or another command is received.

As an example of how you combine more than a single LaserDisk (or DVD) command in the same string, we will now show a sample of a string which sends two commands at the same time to the LaserDisk (or DVD) player.

A typical combined start string for a LaserDisk (or DVD) show is:

LaserSearch PL 1KP <CR> (R) (<CR>) end-o-string

Translated into HEX ASCII, this string becomes (this is what you would enter):

01 50 4C 30 4B 4C 0D D2 8D 00

and it would be displayed on the String Setup Menu as:

01 50 4C 30 4B 4C 0D (52) (0D) 00

This string is just like the start string shown above, except that it sends a command to disable the front panel keypad on the LaserDisk (or DVD) player after it sends the command to start the show playing, but before it sends the <carriage return> that tells the LaserDisk (or DVD) player to start acting upon all the commands it has just received.

The following is a partial listing of the commands supported by Pioneer LaserDisk (or DVD) players. It is by no means a complete list of all of the commands available to you, but includes those common commands which you may actually need. Remember that you only need to send the <carriage return> (0D) (shown as the last character of all the commands) only if you aren't following the current command with any other command. The <carriage return> tells the LaserDisk (or DVD) player to start working on all of the commands it has received since the last <carriage return> was received.

COMMAND	MNEMONIC	1st	2nd	3rd	4th	RESPONSE	2ND
OPEN DOOR	**OP**	**4F**	**50**	**0D**		**D2**	**8D**
Stops the player if it is running and opens the door.							
REJECT	**RJ**	**52**	**4A**	**0D**		**D2**	**8D**
Stops the player motor if it is running.							
PLAY	**PL**	**50**	**4C**	**0D**		**D2**	**8D**
Starts the LaserDisk (or DVD) playing from the current position on the disk.							
PAUSE	**PA**	**50**	**41**	**0D**		**D2**	**8D**
Stops the LaserDisk (or DVD) player and a blue (or black) screen appears.							
STILL	**ST**	**53**	**54**	**0D**		**D2**	**8D**
Freezes the output of the LaserDisk (or DVD) player at the current frame.							
STEP FORWARD	**SF**	**53**	**46**	**0D**		**D2**	**8D**
Steps the current video frame forward by one frame.							
STEP BACKWARD	**SB**	**53**	**42**	**0D**		**D2**	**8D**
Steps the current video frame backwards by one frame							
VIDEO CONTROL	**0VD**	**30**	**56**	**44**	**0D**	**D2**	**8D**
Turns off the video output.							
VIDEO CONTROL	**1VD**	**31**	**56**	**44**	**0D**	**D2**	**8D**
Turns on the video output (default condition).							
CLOSE DOOR	**CO**	**43**	**4F**	**0D**		**D2**	**8D**
Closes the player's door if it was open.							
KEY LOCK	**0KL**	**30**	**4B**	**4C**	**0D**	**D2**	**8D**
Enables the buttons on the front panel of the LaserDisk (or DVD) player.							
KEY LOCK	**1KL**	**31**	**4B**	**4C**	**0D**	**D2**	**8D**
Disables the buttons on the front panel of the LaserDisk (or DVD) player.							
BEEP CONTROL	**0BP**	**30**	**42**	**50**	**0D**	**D2**	**8D**
Mix a 100 ms long 880 Hz beep into the audio channel at 6%.							
BEEP CONTROL	**1BP**	**31**	**42**	**50**	**0D**	**D2**	**8D**
Mix a 100 ms long 880 Hz beep into the audio channel at 10%.							
BEEP CONTROL	**2BP**	**32**	**42**	**50**	**0D**	**D2**	**8D**
Mix a 100 ms long 880 Hz beep into the audio channel at 20%.							
BEEP CONTROL	**3BP**	**33**	**42**	**50**	**0D**	**D2**	**8D**
Mix a 100 ms long 880 Hz beep into the audio channel at 40%.							

Please note that in many ways a LaserDisk (or DVD) player

isn't very bright. If you send it a command to do something that is already done, it will return an error message. As an example, if you ask it to close the door with a CLOSE DOOR command and the door is already closed, it will return an error message 'E04 <CR>' instead of the 'R <CR>' you are expecting. This will cause the Smart Brick Brain to display an error message on the Heads Up Display and stop sending the current string.

- SONY LaserDisk Commands -

The Sony LaserDisk players all share a more or less common command format. A full description of the commands can be found in the technical publications available from Sony or your Sony dealer. You should confirm the the usage of these commands for the specific player you are using.

LaserDisks used with the Standard Smart Brick Brain must be recorded in the CAV format. This allows up to 1/2 hour per side. The Rack Smart Brick Brain supports both CAV and CLV format disks. CLV disks can hold up to one hour per side. Not all players will support the commands needed for using CLV disks in an animation control system. The player must be able to position the disk to a frame (and pause on that frame if it is to be used in a multiple LaserDisk installation). Many Sony players can only position to a 'chapter' when playing CLV disks. They can not be used with CLV disks.

The LaserDisk player must be configured for 9600 baud, eight bit data, and one stop bit (4800 baud can also work in some applications). Other data rates can be used, but lower baud rates can't get the data across fast enough for the Smart Brick Brain while a show is running. Whatever the data rate used, you must set the Smart Brick Brain, LaserDisk player, and the terminal or computer you are using to configure the system to the same speed. If parity is used, then you need to set the data word length to 7 bits, and the parity to 'odd'. If parity is used, then you must also set the Smart Brick Brain to recognize 'odd' parity as well. Connections are made as follows:

Sony LaserDisk

DB-25	SIGNAL	SIGNAL FROM/TO Smart Brick Brain
2	DATA OUT	- serial data in to Smart Brick Brain (GREEN)
3	DATA IN	- serial data out from Brick Brain (BLACK)
7	GROUND	signal ground (BLUE or WHITE)
4 to 5	RTS/CTS	connect these two lines
6 to 20	DSR/DTR	connect these two lines

The electrical output from PC·MACs is at RS-422 voltage levels rather than the RS-232 that these LaserDisk players really want to see. If this causes a problem, or it the wire runs between PC·MACs and the LaserDisk player are long, then you may want to add a RS-232 to RS-422 converter to the LaserDisk player.

In general, you send a command to the LaserDisk player as a single ASCII character. The LaserDisk player will then respond that it has received the command with a 'ACK' (0A). When it has completed the task it will sometimes respond with a 'COMPLETION CODE' (01 usually). Each command must be transmitted one at a time, after which you must wait for a return code(s) before you can send any additional commands.

The majority of commands which you might need to use are all pretty simple ones. The one complicated 'search' command is handled transparently to you when you insert a LaserSearch (01) character in the string being sent to the LaserDisk player (the Smart Brick Brain must be told it is running a Sony player in the configuration screen). This string only performs a search for the starting frame of the show on the LaserDisk player. For this reason it is normally followed by a 'F-PLAY' (3A) command in the same string.

A typical start string for a LaserDisk show is:

LaserSearch F-PLAY <ACK> end-o-string

Translated into HEX ASCII, this string becomes (this is what you would enter):

01 3A 8A 00

and it would be displayed on the String Setup Menu as:

01 3A (0A) 00

Notice that after the LaserSearch command we have to then tell the LaserDisk to start playing, and that we tell the Smart Brick Brain to wait until it gets an 'ACK' (0A) back from the LaserDisk

player so we know that the command has been accepted. After this we have a '00' to tell the Smart Brick Brain that it has found the end of the string.

A typical end string for a Sony LaserDisk show is:

STILL <ACK> end-o-string

Translated into HEX ASCII, this string becomes (this is what you would enter):

4F 8A 00

and it would be displayed on the String Setup Menu as:

4F (0A) 00

The format of this string is pretty much like that of the startup string, except that there is no need to send the LaserSearch string as was done at the beginning of the show, and the F-PLAY command has been replaced by a STILL command for the LaserDisk player. This freezes the image to whatever the last image on the video disk was. Other commands are available for blanking out the video, ejecting the disk, or a variety of other things. You can even build up a string which will tell the LaserDisk player to search for another frame on the disk and freeze or start playing from that frame. If no command is given to the LaserDisk player at the end of a LaserDisk show, then the player will continue playing along until the end of the disk is reached or another command is received.

The following is a partial listing of the commands supported by Sony LaserDisk players. It is by no means a complete list of all of the commands available to you, but includes those common commands which you may actually need. Not all Sony players support this full range of commands or respond in the same way to the commands sent to them. These particular commands are from a LDP-1500's manual, and so may not be applicable to all Sony players. The values shown are what you would actually enter into the strings.

COMMAND	HEX CHARACTER SENT	POSITIVE RESPONSE
AUDIO MUTE ON [2]	**24**	**8A**
Stops the audio output from the player.		
AUDIO MUTE OFF [1]	**25**	**8A**
Enables the audio output from the player.		
CH-1 ON	**46**	**8A**
Turns on Audio output from Channel 1 to 'LEFT' audio output connector.		
CH-1 OFF	**47**	**8A**
Turns off Audio output from CH 1 audio. CH 2 audio will go to both outputs if it is still enabled.		
CH-2 ON	**48**	**8A**
Turns on Audio output from Channel 2 to 'Right' audio output connector.		
CH-2 OFF	**49**	**8A**
Turns off Audio output from CH 2 audio. CH 1 audio will go to both outputs if it is still enabled.		
CLEAR ALL	**56**	
Stops any ongoing command and puts player into STILL mode.		
EJECT[3]	**2A**	**8A 83**
Opens the disk compartment. Returns 8A immediately, 83 when task is completed.		
EJECT ENABLE [2]	**74**	**8A**
Enables the 'Eject' button on the front of the LaserDisk player.		
EJECT DISABLE [2]	**75**	**8A**
Disables the 'Eject' button on the front of the LaserDisk player.		
F-PLAY	**3A**	**8A**
Puts the player in normal play mode.		
F-STEP and STILL[2]	**2B**	**8A**
Steps the LaserDisk forward by one frame and display still frame.		
R-STEP and STILL[2]	**2C**	**8A**
Steps the LaserDisk backwards by one frame and display still frame.		
FRAME # MODE	**55**	**8A**
Sets the player to 'frame' mode. This is the only mode which will work with the Smart Brick Brain.		

[2] Command not available on all Sony models

[3] Command not available on all Sony models

MOTOR ON **62** **8A 8A**

Turns the motor on if it is stopped. Returns the first 8A immediately, and the second after the motor is up to speed. Returns one NAK if the motor was already on.

MOTOR OFF **63** **8A 8A**

Turns the motor off if it is running. Returns the first 8A immediately, and the second after the motor has wound down. Returns one NAK if the motor was already off.

NAK **8B**

Code returned when the player doesn't like the command, as in the above two examples.

STILL **4F** **8A**

Sets the player to display a frozen picture.

STOP **3Fh** **8A**

Stops all video and audio output.

VIDEO OFF [2] **26** **8A**

Turns off video output.

VIDEO ON [2] **27** **8A**

Turns on video output.

This is the absolutely very last page that isn't left blank.

- Panasonic LaserDisk Commands -

Panasonic LaserDisk players are supported on the Rack Smart Brick Brain ONLY. The only player that this code has been tested on as of this writing is the AG-LD-30. Other players from Panasonic are known to have mutually incompatible command formats, and so are not recommended. A full description of the commands can be found in the technical publications available from Panasonic or your Panasonic dealer. You should confirm the the usage of these commands for the specific player you are using.

The Panasonic LaserDisk player only supports disks recorded in the CAV format when used with the Rack Smart Brick Brain. This allows up to 1/2 hour per side.

The Panasonic LaserDisk player must be configured for 9600 baud, eight bit data, and one stop bit (4800 baud might also work in some applications). Other data rates can be used, but lower baud rates can't get the data across fast enough for the Smart Brick Brain while a show is running. Whatever the data rate used, you must set the Smart Brick Brain, LaserDisk player, and the terminal or computer you are using to configure the system to the same speed. If parity is used, then you need to set the data word length to 7 bits, and the parity to 'odd'. You must also set the Smart Brick Brain to recognize 'odd' parity as well. Connections are made as follows:

Panasonic LaserDisk

DB-15	SIGNAL	SIGNAL FROM/TO Smart Brick Brain
2	DATA OUT	- serial data in to Smart Brick Brain (GREEN)
3	DATA IN	- serial data out from Brick Brain (BLACK)
1, 11 or 15	GROUND	signal ground (BLUE or WHITE)

The electrical output from PC·MACs is at RS-422 voltage levels rather than the RS-232 that these LaserDisk players really want to see. If this causes a problem, or it the wire runs between PC·MACs and the LaserDisk player are long, then you may want to add a RS-232 to RS-422 converter to the LaserDisk player.

In general, you send a command to the LaserDisk player as a very long series of characters. This consists of the command lead-in character (02h), the command to be sent, and finally the command lead-out character (03h). When it has completed the task the LaserDisk player will respond with an 'ACK' (06h), the command lead-in character (02h), the command which was sent, and finally the command lead-out character (03h). Multiple commands can be combined on a single line, separated by a semicolon (";"). The player will not always process the commands and echo them in the order in which you sent them, so you must test any multiple command you might want to use thoroughly. We recommend you only use the default string #5 (the start string) and #7 (the end string) when working with Panasonic LaserDisk Players.

The majority of commands which you might need to use are all pretty simple ones. The one complicated 'search' command is handled transparently to you when you insert a LaserSearch (01) character in the string being sent to the LaserDisk player (the Smart Brick Brain must be told it is running a Panasonic player in the configuration screen). This string only performs a search for the starting frame of the show on the LaserDisk player. For this reason it is normally followed by a 'OPL' (play) command in the same string.

A typical start string for a Panasonic LaserDisk show is:

LaserSearch Lead-in Play Lead-out (ACK) (Lead-in) (Play) (Lead-out) end-o-string

Translated into HEX ASCII, this string becomes (this is what you would enter):

01h 02h 4Fh 50h 4Ch 03h 86h 82h CFh D0h CCh 83h 00h

and it would be displayed on the String Setup Menu as:

01 02 4F 50 4C 03 (06) (02) (4F) (50) (4C) (03) 00

Notice that after the LaserSearch command we have to then tell the LaserDisk to start playing, and that we tell the Smart Brick Brain to wait until it gets all of the echoed characters back from the LaserDisk player so we know that the command has been accepted. After this we have a '00' to tell the Smart Brick Brain that it has found the end of the string.

A typical end string for a Panasonic LaserDisk show is:

Lead-in Pause Lead-out (ACK) (Lead-in) (Pause) (Lead-out) end-o-string

Translated into HEX ASCII, this string becomes (this is what you would enter):

02h 4Fh 50h 41h 03h 86h 82h CFh D0h C1h 83h 00h

and it would be displayed on the String Setup Menu as:

02 4F 50 41 03 (06) (02) (4F) (50) (41) (03) 00

The format of this string is pretty much like that of the startup string, except that there is no need to send the LaserSearch string as was done at the beginning of the show, and the Play command has been replaced by a Pause command for the LaserDisk player. This freezes the image to whatever the last image on the video disk was. Other commands are available for blanking out the video, ejecting the disk, or a variety of other things. You can even build up a string which will tell the LaserDisk player to search for another frame on the disk and freeze or start playing from that frame. If no command is given to the LaserDisk player at the end of a LaserDisk show, then the player will continue playing along until the end of the disk is reached or another command is received.

COMMAND	HEX CHARACTER SENT	POSITIVE RESPONSE
PLAY (OPL)	**02h 4Fh 50h 4Ch 03h**	**86h 82h CFh D0h CCh 83h**
Starts the player advancing at normal play speed.		
PAUSE (OPA)	**02h 4Fh 50h 41h 03h**	**86h 82h CFh D0h C1h 83h**
Stops the playback without turning off the spindle motor. Displays a		

blank screen.

EJECT (OEJ) **02h 4Fh 45h 4Ah 03h** **86h 82h CFh C5h CAh 83h**

Stops the playback and spits out the LaserDisk. A blank screen is displayed.

STOP (OSP) **02h 4Fh 53h 50h 03h** **86h 82h CFh D3h D0h 83h**

Stops the playback, turns off the spindle motor and blanks the screen.

STILL (OTL) **02h 4Fh 54h 4Ch 03h** **86h 82h CFh D4h CCh 83h**

Stops the playback at the current frame.

I lied.

HEXadecimal to Decimal to Percentage

This chart shows decimal, HEXadecimal, and a few percentage equivalents to aid you when you need to convert between numbering bases:

decimal	HEX	ASCII	%	decimal	HEX	ASCII	%	decimal	HEX	ASCII	%	decimal	HEX	ASCII	
00	00h	null	0%	64	40h	@	25%	128	80h	(null)	50%	192	C0h	(@)	75%
1	01h	soh/^A		65	41h	A		129	81h	(soh)		193	C1h	(A)	
2	02h	stx/^B		66	42h	B		130	82h	(stx)		194	C2h	(B)	
3	03h	etx/^C		67	43h	C		131	83h	(etx/)		195	C3h	(C)	
4	04h	eot/^D		68	44h	D		132	84h	(eot)		196	C4h	(D)	
5	05h	eng/^E		69	45h	E		133	85h	(eng)		197	C5h	(E)	
6	06h	ack/^F		70	46h	F		134	86h	(ack)		198	C6h	(F)	
7	07h	bell/^G		71	47h	G		135	87h	(bell)		199	C7h	(G)	
8	08h	bs/^H		72	48h	H		136	88h	(bs)		200	C8h	(H)	
9	09h	ht/^I		73	49h	I		137	89h	(ht)		201	C9h	(I)	
10	0Ah	lf/^J		74	4Ah	J		138	8Ah	(lf)		202	CAh	(J)	
11	0Bh	vt/^K		75	4Bh	K		139	8Bh	(vt)		203	CBh	(K)	
12	0Ch	ff/^L		76	4Ch	L		140	8Ch	(ff)		204	CCh	(L)	
13	0Dh	cr/^M		77	4Dh	M		141	8Dh	(cr)		205	CDh	(M)	
14	0Eh	so/^N		78	4Eh	N		142	8Eh	(so)		206	CEh	(N)	
15	0Fh	si/^O		79	4Fh	O		143	8Fh	(si)		207	CFh	(O)	
16	10h	dle/^P		80	50h	P		144	90h	(dls)		208	D0h	(P)	
17	11h	dc1/^Q		81	51h	Q		145	91h	(dc1)		209	D1h	(Q)	
18	12h	dc2/^R		82	52h	R		146	92h	(dc2)		210	D2h	(R)	
19	13h	dc3/^S		83	53h	S		147	93h	(dc3)		211	D3h	(S)	
20	14h	dc4/^T		84	54h	T		148	94h	(dc4)		212	D4h	(T)	
21	15h	nak/^U		85	55h	U		149	95h	(nak)		213	D5h	(U)	
22	16h	syn/^V		86	56h	V		150	96h	(syn)		214	D6h	(V)	
23	17h	etb/^W		87	57h	W		151	97h	(etb)		215	D7h	(W)	
24	18h	can/^X		88	58h	X		152	98h	(can)		216	D8h	(X)	
25	19h	em/^Y		89	59h	Y		153	99h	(em)		217	D9h	(Y)	
26	1Ah	sub/^Z		90	5Ah	Z		154	9Ah	(sub)		218	DAh	(Z)	
27	1Bh	ESC		91	5Bh	[		155	9Bh	(ESC)		219	DBh	([)	
28	1Ch	FS		92	5Ch	\		156	9Ch	(FS)		220	DCh	(\)	
29	1Dh	GS		93	5Dh	]		157	9Dh	(GS)		221	DDh	(])	
30	1Eh	RS		94	5Eh	^		158	9Eh	(RS)		222	DEh	(^)	
31	1Fh	VS		95	5Fh			159	9Fh	(VS)		223	DFh	( )	
32	20h	SP	12.5%	96	60h	`	37.5%	160	A0h	(SP)	62.5%	224	E0h	(`)	87.5%
33	21h	!		97	61h	a		161	A1h	(!)		225	E1h	(a)	
34	22h	"		98	62h	b		162	A2h	(")		226	E2h	(b)	
35	23h	#		99	63h	c		163	A3h	(#)		227	E3h	(c)	
36	24h	$		100	64h	d		164	A4h	($)		228	E4h	(d)	
37	25h	%		101	65h	e		165	A5h	(%)		229	E5h	(e)	
38	26h	&		102	66h	f		166	A6h	(&)		230	E6h	(f)	
39	27h	`		103	67h	g		167	A7h	(`)		231	E7h	(g)	
40	28h	(		104	68h	h		168	A8h	(()		232	E8h	(h)	
41	29h	)		105	69h	i		169	A9h	())		233	E9h	(i)	
42	2Ah	*		106	6Ah	j		170	AAh	(*)		234	EAh	(j)	
43	2Bh	+		107	6Bh	k		171	ABh	(+)		235	EBh	(k)	
44	2Ch	`		108	6Ch	l		172	ACh	(`)		236	ECh	(l)	
45	2Dh	-		109	6Dh	m		173	ADh	(-)		237	EDh	(m)	
46	2Eh	·		110	6Eh	n		174	AEh	(·)		238	EEh	(n)	
47	2Fh	/		111	6Fh	o		175	AFh	(/)		239	EFh	(o)	
48	30h	0		112	70h	p		176	B0h	(0)		240	F0h	(p)	
49	31h	1		113	71h	q		177	B1h	(1)		241	F1h	(q)	
50	32h	2		114	72h	r		178	B2h	(2)		242	F2h	(r)	
51	33h	3		115	73h	s		179	B3h	(3)		243	F3h	(s)	
52	34h	4		116	74h	t		180	B4h	(4)		244	F4h	(t)	
53	35h	5		117	75h	u		181	B5h	(5)		245	F5h	(u)	
54	36h	6		118	76h	v		182	B6h	(6)		246	F6h	(v)	
55	37h	7		119	77h	w		183	B7h	(7)		247	F7h	(w)	
56	38h	8		120	78h	x		184	B8h	(8)		248	F8h	(x)	
57	39h	9		121	79h	y		185	B9h	(9)		249	F9h	(y)	
58	3Ah	:		122	7Ah	z		186	BAh	(:)		250	FAh	(z)	
59	3Bh	;		123	7Bh			187	BBh	(;)		251	FBh	( )	
60	3Ch	<		124	7Ch			188	BCh	(<)		252	FCh	( )	
61	3Dh	=		125	7Dh	|		189	BDh	(=)		253	FDh	(|)	
62	3Eh	>		126	7Eh	~		190	BEh	(>)		254	FEh	(~)	